SCOTT EVO 2.1 S

INSTALLATION INSTRUCTIONS

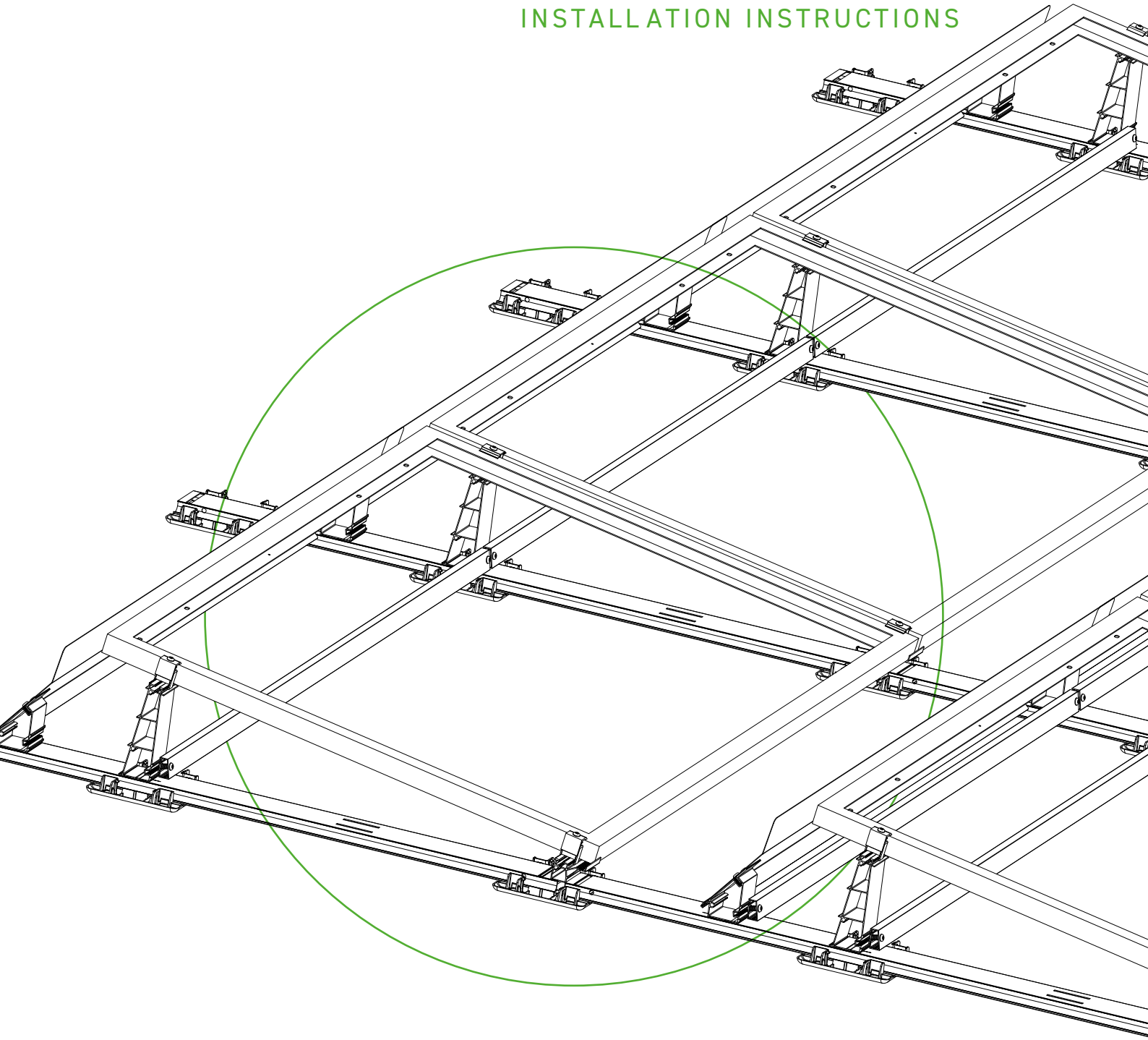

SCOTT NORGE

TO A FINISHED SYSTEM
IN JUST **EIGHT STEPS**

Contents

SCOTT EVO 2.1 S

INTERACTIVE
ASSEMBLY INSTRUCTIONS
Page selection by click

General Safety Instructions

Please note that our general safety instructions must be observed.

Installation only by qualified personnel

Scott photovoltaic substructures may only be installed and commissioned by qualified personnel. These persons must be able to ensure the proper and professional installation of our products on the basis of their professional aptitude, which they have acquired, for example, through training or professional experience.

Before assembly starts:

1. Testing the static requirements of the roof and building:
Before installing the Scott photovoltaic substructures, it must be checked on site whether the roof and building statics allow safe installation and safe operation of the photovoltaic system. This must be checked by a qualified person, for example a structural engineer, on site before installation. The information in the project report is based only on planning assumptions, which do not necessarily have to correspond to the conditions on site. Static requirements must therefore be clarified on site and in advance of installation. To do this, have the confirmation of a qualified person present and do not start the installation without such a document.

2. Compliance with construction and accident prevention regulations:
It is essential to comply with national and site-specific construction regulations, standards and environmental regulations.

Occupational safety and accident prevention regulations as well as regulations of the professional associations must be complied with!

In particular, the following must be taken into account:

- It is necessary to wear safety clothing [esp. Safety helmet, work shoes and gloves].
- For roof work, the regulations for work on the roof must be observed [e.g. use of fall protection, scaffolding with safety gear from an eaves height of 3 m etc.],
- The presence of two people is mandatory for the entire assembly process in order to be able to provide rapid assistance in the event of an accident,

3. Check installation instructions for updates:
Scott mounting systems are constantly being further developed. Installation sequences may change. Therefore, be sure to check the installation instructions for updates before installation. These can be found at **www.scott.no/downloads/**. On request, we will also be happy to send you the current version of the installation instructions.

During the entire installation time, it must be ensured that a copy of the installation instructions is available to each installer.

4. The module manufacturer's installation instructions must also be observed.

5. Equipotential bonding between the individual system components must be carried out in accordance with the respective country-specific regulations.

Scott assumes no liability for damages resulting from non-compliance with general safety instructions.

General System Notes

a. Basics of planning with **Scott** PLAN

What is **Scott** PLAN for?

Scott PLAN is used to plan the substructures distributed by Scott on roofs on the basis of data entered by the user and the planning assumptions based on this, which are stored in Scott Plan.

Who can plan with **Scott** PLAN?

Requirement of expertise for planning with Scott PLAN The proper and correct use of Scott PLAN requires expertise and experience not only in the field of substructures for photovoltaic systems, but also in the construction industry with regard to the roofs on which the entire system is to be used by the end customer.

Who plans **Scott** PLAN?

1. Data input by the user as the basis for planning
The starting point and basis for planning with Scott PLAN is always and exclusively the project data entered by the user. Scott does not check this data for accuracy. Rather, the user is solely responsible for correct data collection and entry in Scott PLAN.

Attention: If the data is not collected and/or entered correctly by the user, this will have an impact on planning. Changes can lead, among other things, to deviating quantities of material and deviating static requirements. This may lead to personal injury as well as financial losses for which Scott assumes no liability.

2. Planning assumptions in Scott PLAN
Scott PLAN processes data entered by the user and uses certain planning assumptions in the process. These planning assumptions in turn result from technical regulations that underlie the calculations of Scott PLAN.

Which planning assumptions underlie the concrete planning can be taken from the project report.

Scott PLAN takes into account the Eurocodes, i.e. the European-wide uniform rules for design in the construction industry, including national annexes, as well as national building regulations.

Scott endeavours to ensure the up-to-dateness of the Eurocodes taken into account by means of updates. However, we would like to point out that after the publication of new rules, a certain period of time is always required to implement them in the software, which is why there is no entitlement to appropriate updates and the user is always responsible for observing the latest state of the rules on which the program is based.

The rules are applied on the basis of the specified location. It is the responsibility of the user to check planning assumptions for their correctness.

Attention: If planning assumptions are not checked by the user for correctness, this has an impact on the planning. Changes can lead, among other things, to deviating quantities of material and deviating static requirements. This may lead to personal injury as well as financial losses for which Scott assumes no liability.

3. What is the purpose of the project report?
What does "What's important is what's on the roof" mean?
Scott PLAN creates a project report based on the user's input. However, this planning report cannot and should not replace the expert planning based on actual conditions on site.

With the project report, the planning of your project is therefore not completed, but only begins.

Proper and professional procedure is only the following, which is solely the responsibility of the user:

First step: Before ordering the photovoltaic substructures and even more so before installing them on the roof, the user must check the accuracy and plausibility of the data, planning assumptions and results in the project report.

Second step: ("What's important is what's on the roof!") It is imperative that the user verifies the project report also on the basis of the actual conditions on the roof. In our experience, project-specific features must be taken into account for each roof, which usually only arise on the roof on site.

If the user does not have the necessary expertise to review the project report, they must consult an expert person for this purpose. If changes arise from these mandatory audit steps compared to the project report, a new planning must be carried out with the changed data in Scott PLAN.

Attention: If the data is not and/or not correctly verified by the user based on the actual circumstances, this has an impact on the planning. Changes may lead, among other things, to deviating quantities of material and deviating static requirements. This may lead to personal injury as well as financial losses for which Scott assumes no liability.

4. In addition, which other technical requirements must always be observed by the customer and checked independently?

a. Technical requirements for the roof and its components
Scott PLAN assumes that the roof and its components are suitable for the construction of a PV system and the customer has had this expertly checked before planning.

Scott PLAN does not guarantee the compatibility of the PMT photovoltaic substructure with the roof with regard to roofing, roof substructure and roof construction. Rather, this is to be checked by the user themselves.

Before installation, the user must ensure that the functional layers of the roof structure (e.g. waterproofing layer, thermal insulation layer) are suitable and designed for the installation of photovoltaic systems. In particular, it must be ensured by the user that the suitability for use of the thermal insulation layer continues to exist despite the additional loads which arise as a result of the installation of the photovoltaic system (substructure and solar modules).

Tip: To do this, have the approval of the manufacturer of the individual components granted and verify the manufacturer's specifications with the conditions on site on the roof.

The user must check the suitability, load-bearing capacity and serviceability of the entire roof structure for the installation of the photovoltaic system as a whole.

A structural engineer must be consulted to check the load-bearing capacity. Scott-PLAN does not replace this check under any circumstances.

Attention: If the user does not check the compatibility of the photovoltaic substructure with the roof and/or does not check it properly, this will have an impact on the planning. Changes may lead, among other things, to deviating quantities of material and deviating static requirements. This may lead to personal injury as well as financial losses for which Scott assumes no liability.

b. Static requirements
Scott PLAN does not take into account the static requirements of the building on the roof of which the photovoltaic system is to be built.

Building and roof statics must therefore be professionally checked by the user before installation on his own responsibility. A structural engineer must be consulted for this purpose. Scott-PLAN does not replace this check under any circumstances.

Attention: If the building statics are not checked or not checked correctly by the user, this has an impact on the planning. Changes can lead, among other things, to deviating quantities of material and deviating static requirements. This may lead to personal injury as well as financial losses for which Scott assumes no liability.

c. Photovoltaic modules
Scott-PLAN enables planning with a variety of photovoltaic modules. However, due to the large number of photovoltaic modules available on the market, not all modules are stored in the database. Missing modules are added to the database on a separate request based on the module manufacturer's data sheet.

Scott does not guarantee the up-to-dateness of the module data. In particular, dimensions and weight parameters must be verified by the customer before planning.

Scott plan only takes into account the dimensions and weight of the modules. Other parameters are not taken into account.

Therefore, please check the compatibility of the module with the substructure before installation on the basis of the assembly guidelines of the module manufacturer.

Scott-PLAN requires that the module may also be used in the mounting form clamping on the short module sides. Therefore, please check whether the clamping points of the module comply with the manufacturer's specifications before installation. If the connection points do not correspond to the specifications of the module manufacturer, it is recommended to contact the module manufacturer in order to obtain a release of the planning.

This approval can either be generally available as part of the module certification or possibly also be granted by the module manufacturer on a project-specific basis.

Attention: If the compatibility of the substructure with the solar modules is not clarified by the user, this can lead to financial losses for which Scott assumes no liability

d. Securing the photovoltaic system against shifts due to thermal expansion (so-called "caterpillar effect")

The photovoltaic system is exposed to constant temperature fluctuations on the roof. As a result, very slow migration effects of the substructure on the roof waterproofing can occur over the course of the service life of the photovoltaic system, even with a very flat roof inclination. This process is also referred to as "temperature migration" or more vividly as the "caterpillar effect".

The gradual displacement of the photovoltaic system on the roof can lead to damage to the cabling, the roof covering (such as, for example, film, bitumen, gravel, substrate, etc.) of the further functional layers and any rising components present (such as, for example, skylights, aeration and ventilation systems, drainage systems, chimneys etc.).
In the worst case, the photovoltaic system can gradually move beyond the roof edge over time.

In order to prevent this damage, we have decided to give a general recommendation for a connection from 1.0° roof pitch.

This follows from a recommendation of the German Solar Industry Association (Bundesverband Solarwirtschaft e. V. – BSW-Solar), titled: "Position Securing Due to Thermal Expansions ("Temperature Migration")".

Suitable measures for securing the photovoltaic system against displacements due to thermal expansion are, for example, the coupling of module fields via the roof ridge or selective fastening of the system to the roof structure.

With the introduction of the new version of the EVO 2.1 system with ProPlate and its mechanical attachment to the bottom rail, we are adapting our recommendation for connecting the EVO 2.1 system to a flat roof. However, this amended recommendation only applies to the EVO 2.1 system. The connection to the roof must only be made from a gradient of about 2% (roof inclination about 1.15°), provided that the following requirements are met:

- The **Scott checklist** must be completed in full and has been taken into account in the planning.

- Compliance with the following **maintenance routine** by Scott customer:

Maintenance interval	Shift	Measure
Annual maintenance	No shift	No need for action
Annual maintenance	up to approx. 2 cm	Inspect the situation with special attention during the next maintenance
Annual maintenance	2-3 cm	Intermediate inspection after approx. 6 months
Intermediate inspection (6 months)	further shift of 1.5 cm or more	subsequent mechanical connection

Attention: Failure to secure the photovoltaic system against displacement due to thermal expansion may lead to personal injury as well as property and financial losses for which Scott assumes no liability.

Installation Instructions and Maintenance

Installation instructions

Installation should not begin until the site manager's written request has been received.
The components of the Scott mounting system are used exclusively for mounting PV modules. Depending on the type of roof of the building and the quality of the roof, the components intended for this purpose must be used. The exact article versions can be found in the project documents, consisting of project report and CAD plan.

When using the mounting system, it is essential to observe the installation instructions, safety instructions and system instructions.

In the event of improper use of the components, non-compliance with the instructions and the use of components not belonging to the system, any claim to warranty, guarantee and liability towards Scott shall lapse. The user is liable for damage and consequential damage to other components, PV modules or the building, as well as for personal injury.

Before starting the installation, the compatibility between the roof skin and the installation system must be tested and ensured and the roof checked for damage of any kind. These must be recorded in the **Roof Inspection Protocol**. Repair work may be necessary.

In the case of very uneven roofs or roof seals, compensation measures must be taken if necessary to ensure uniform load introduction. In order to ensure a flat support of the main bottom profiles on the roof skin, the roof surface must be cleaned before construction begins and impurities, such as moss, leaves, dirt, stones, etc. removed.

The necessary distances to the roof edges specified in the project documents must be observed. The maximum module field size depends on the type of roof. In the case of roofs with substrate or gravel fill, it must be ensured that a sufficiently non-slip connection is made.

The surface load must not exceed the residual load-bearing capacity of the building. It must be ensured that the runoff of rainwater is not hindered. Roof drainage must be included in the installation planning.

It must be checked whether lightning protection provisions have to be changed and reworked as a result of the installation of the PV system.

A thermal separation (distance between module fields) must be maintained according to the Scott PLAN project documents.

Attention: If the actual module dimensions exceed the module widths specified in the table, assembly must not be started.

The specified tightening torques in these assembly instructions must be observed urgently.

After events such as storms, heavy rain, earth movements, etc., the system must be checked by a specialist for damage. If damage is detected during the inspection, these must be remedied immediately. Defective components must be replaced by new components.

Maintenance

Photovoltaic substructures are not maintenance-free. Maintenance, in particular of the correct positioning of the ballast bricks and the building protection mats, must be carried out annually and documented in a maintenance log. Furthermore, all components of the Scott mounting system must be checked at regular intervals and documented accordingly. We recommend annual maintenance as per our **maintenance protocol.**

The recommendations for maintenance routines of the EVO 2.1 system due to thermal expansion must be observed.

After exceptional strong-wind events, we recommend maintenance immediately after the strong-wind event.

Attention: Failure to maintain the installation may lead to personal injury as well as financial losses for which Scott assumes no liability.

Required Tools

1 Tape measure

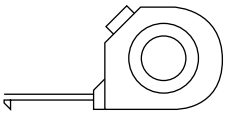

2 Chalk line

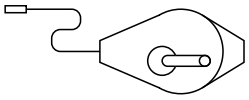

3 Torque wrench with hexagon socket SW 5 mm

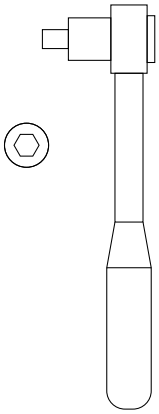

4 Distance gauge (optional tool)

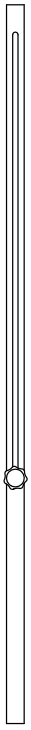

5 Rubber hammer (optional tool)

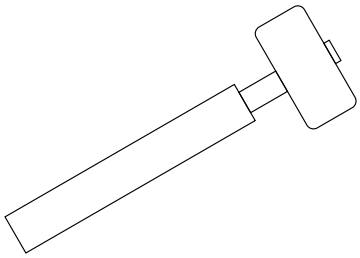

6.1 Click Guide (optional tool)

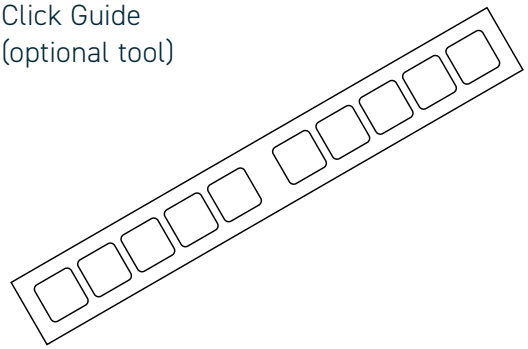

6.2 Click Guide ReUse (optional tool)

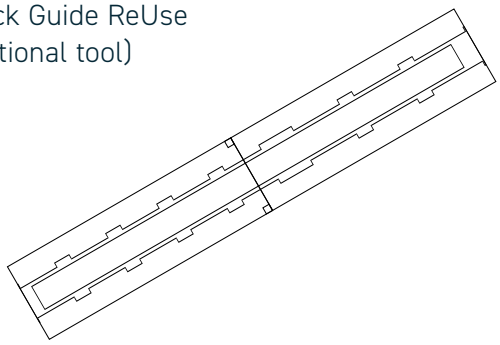

Attention! Some components are available in different lengths and designs.
The exact item details can be found in the project documents.

Component Types

A Initial and end bottom profile

3.3206 - EN AW 6060 T66 (EP)

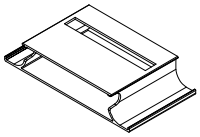

B Main bottom profile

3.3206 - EN AW 6060 T66 (EP)

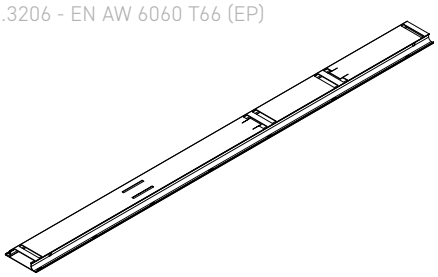

C Base

3.3206 - EN AW 6060 T66 (EP)

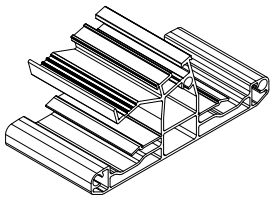

E Tower

Aluminium 6061

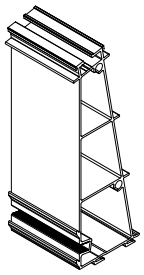

E Rear wall tower

Aluminium 6061

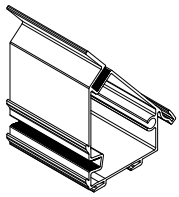

F Cross and ballast strut, screw M8 x 30

3.3206 - EN AW 6060 T66 (EP) / 1.4301

G Cross strut connector

3.3206 - EN AW 6063 T6 (EP)

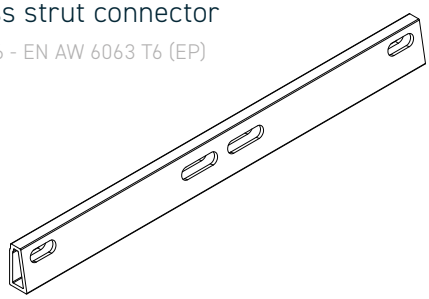

H Ballast stone with standard dimensions 40 × 40 × 4 cm (not included)

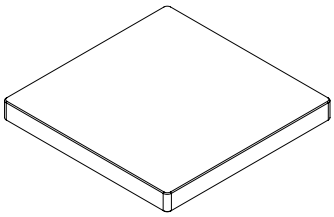

Attention! Some components are available in different lengths and designs.
The exact item details can be found in the project documents.

Component Types

I Centre and end clamp

AlMgSi 0.5 F22 / 1.4301

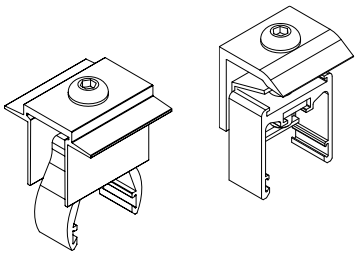

J Rear panel, screw M8 x 16

AlMg3 H22 (EN AW-5754)

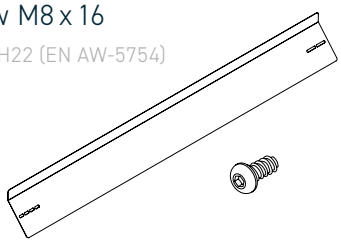

K ProPlate*

PE-HD Recyclate

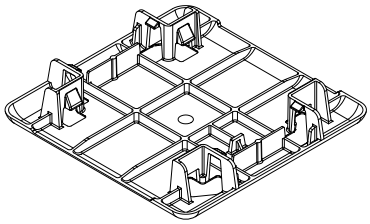

*ProPlate Gravel under optional components on page 27.

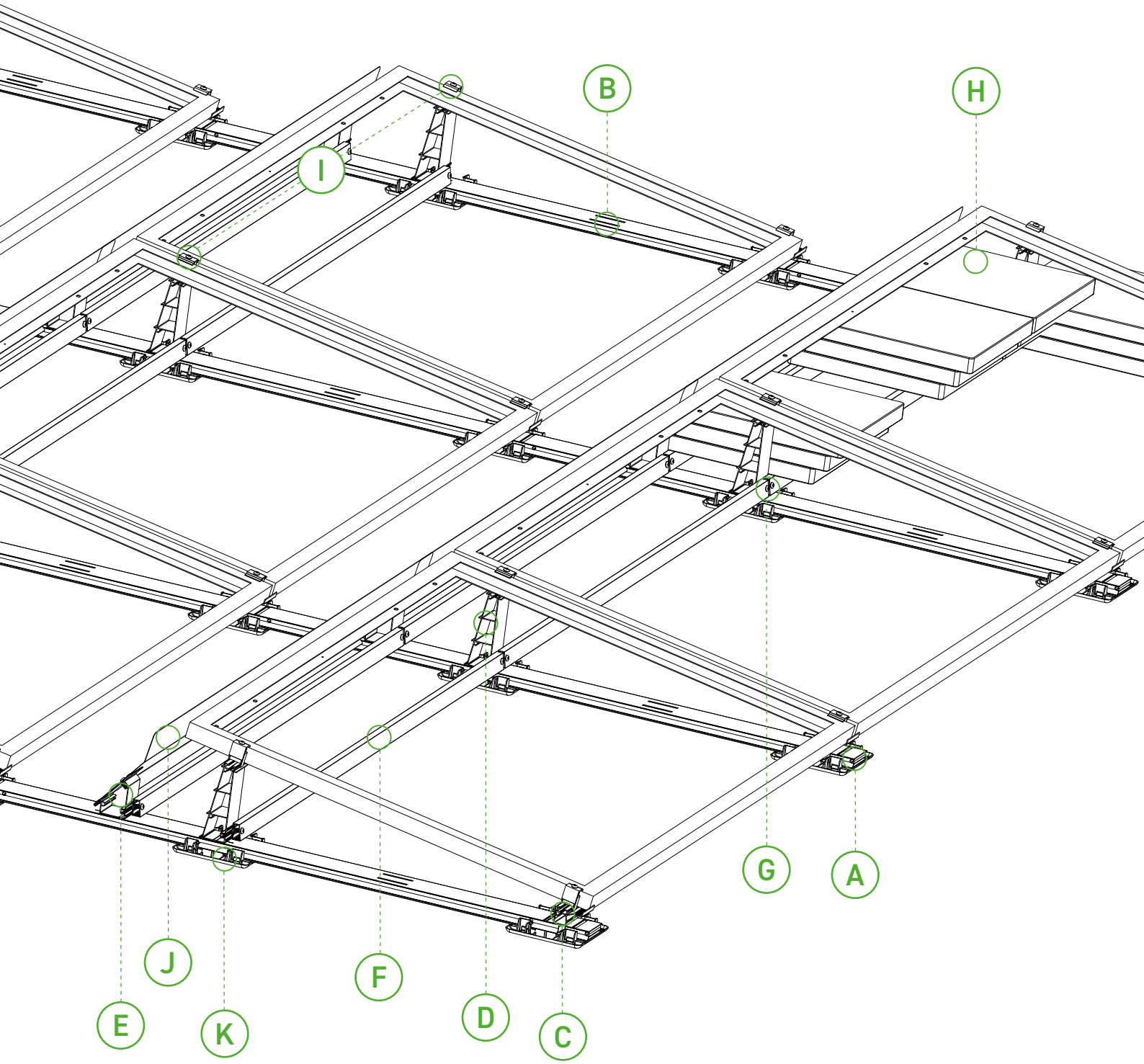

A Initial and final bottom profile

B Main bottom profile

C Base

D Tower

E Rear wall tower

F Cross and ballast strut

G Cross strut connector

H Standard ballast brick

I Centre and end clamp

J Back panel

K ProPlate

1

Lay out bottom profiles **A** and **B** and click in base **C**.

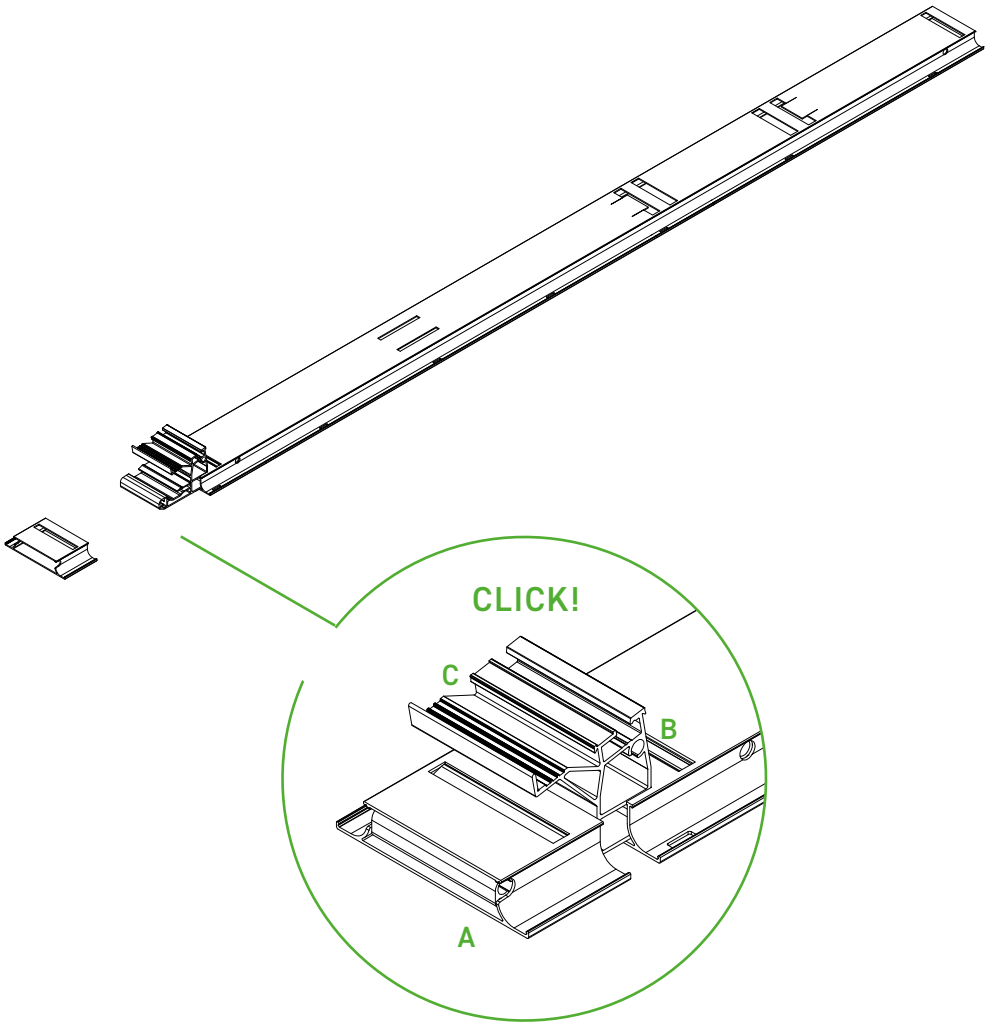

The base **C** is to be pushed into the main bottom profile **B** until the click lock engages with an audible noise. One base must be installed per main bottom profile. At the beginning and end of a main bottom strand, a starting and end bottom profile **A** must also be clicked onto the base **C** .

Attention!
The snap-in connection must be checked for clean form fit and strength.

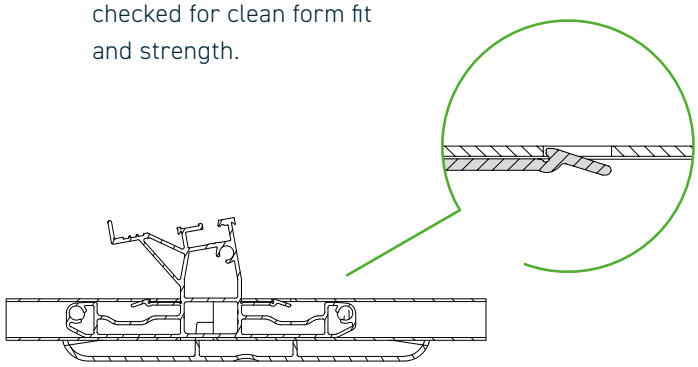

2.1

Place the ProPlates J into the Click Guide.

The exact placement of the ProPlates can be found in the data sheet with the corresponding assignment variants.

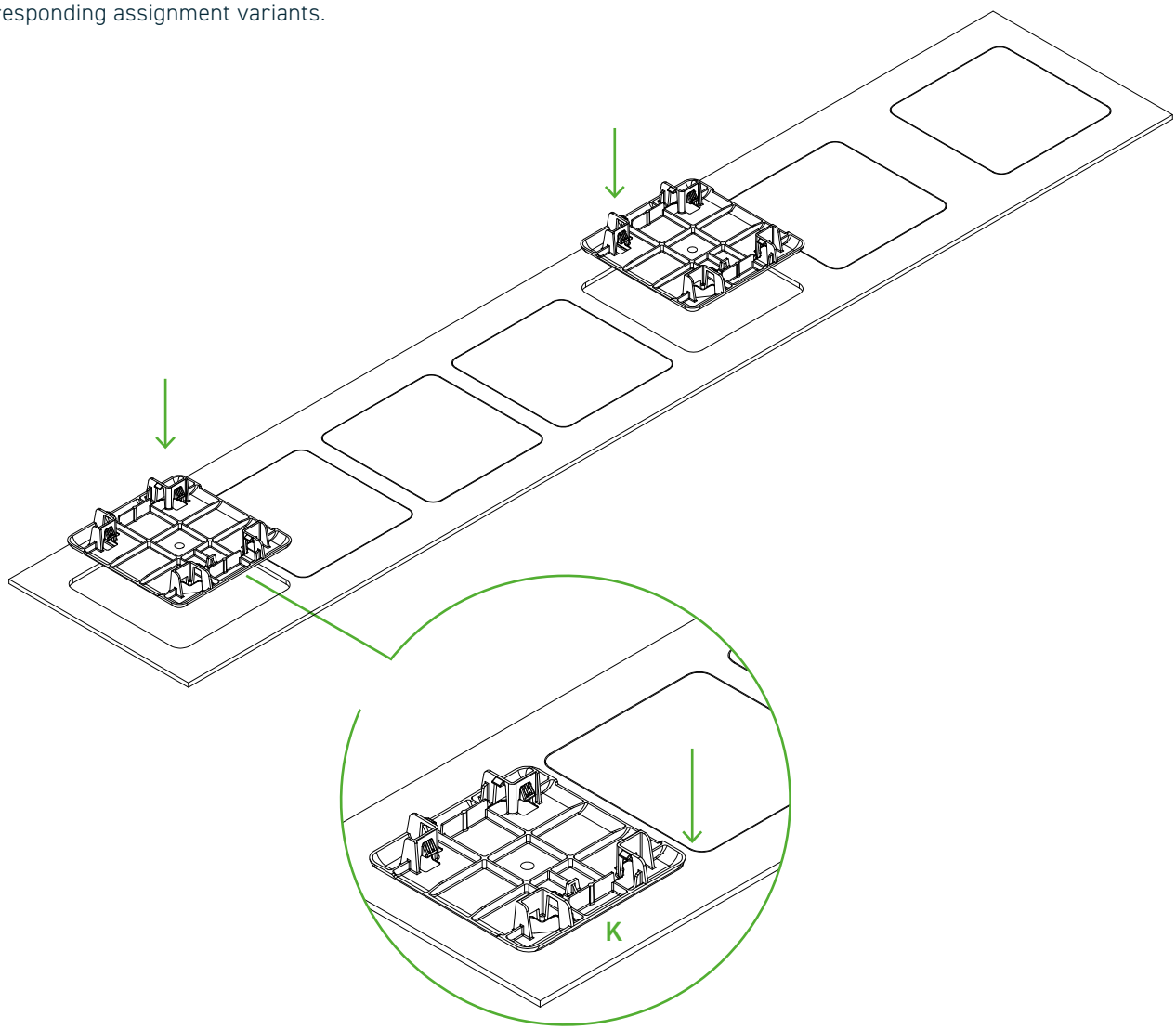

Note
Click Guide and Click Guide ReUse can be used for both ProPlates and ProPlates Gravel.

Attention!
The application of the Click Guide ReUse and the ProPlates Gravel can be found on page 27.

2.2

Mount ProPlates **K**.

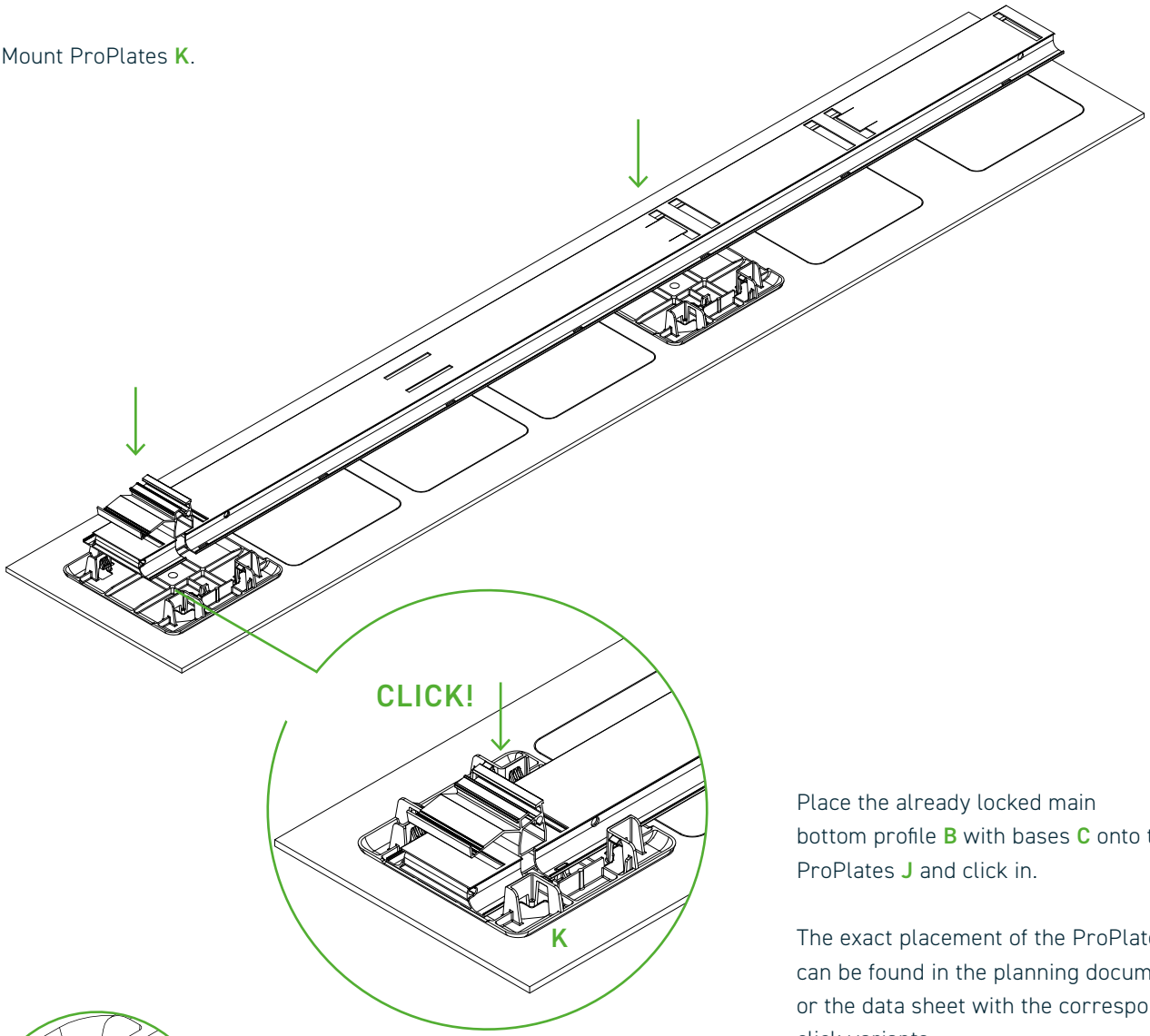

Place the already locked main bottom profile **B** with bases **C** onto the ProPlates **J** and click in.

The exact placement of the ProPlates can be found in the planning documents or the data sheet with the corresponding click variants.

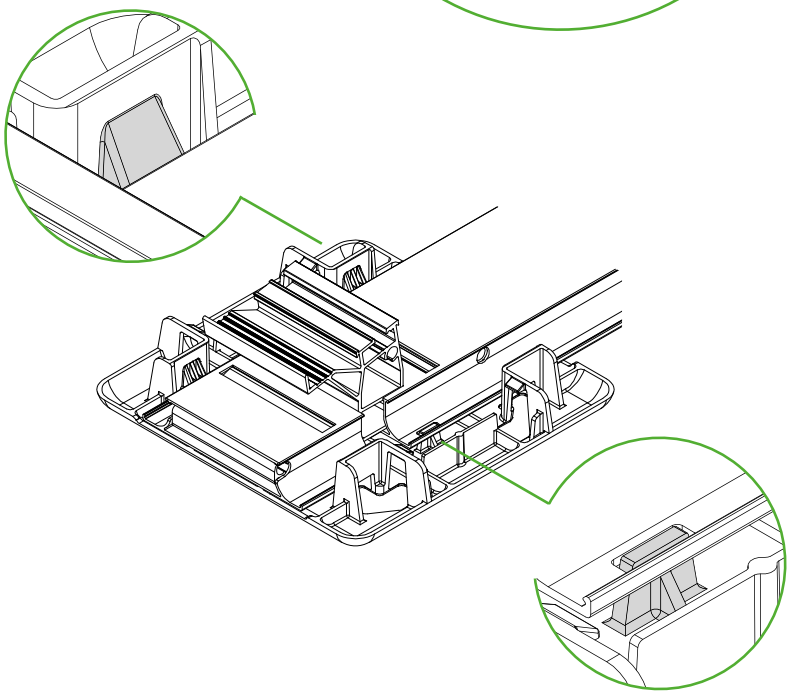

Attention!
Care must be taken to ensure that the latching lug and the index lug are correspondingly latched to the main bottom profile.

3

Design and connect bottom profiles **A** and **B** with clicked-in base **C** and mounted ProPlates **K**.

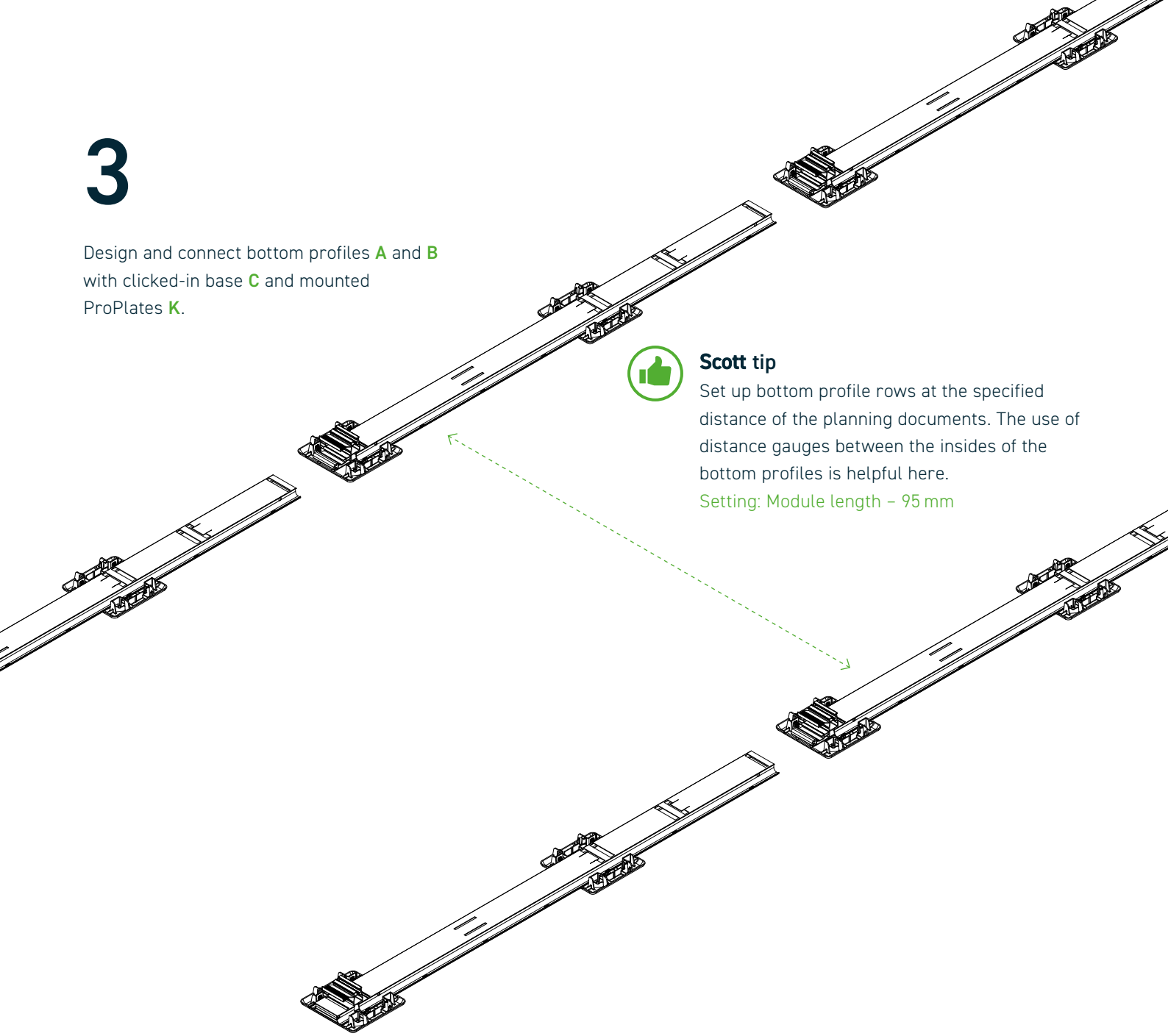

Scott tip

Set up bottom profile rows at the specified distance of the planning documents. The use of distance gauges between the insides of the bottom profiles is helpful here.

Setting: Module length – 95 mm

Lay out the main bottom profile **B** with the base **C** installed one after the other according to the project report.

The order is starting from south to north. The sequence is the same in each row and always starts at the beginning of the row with a start and end bottom profile **A**.

Then slide the components into each other until the click catch snaps into place with an audible noise. The bottom profile rows must now be set up according to the distance specified in the project report (see Scott tip).

Attention!

The snap-in connection must be checked for clean form fit and strength.

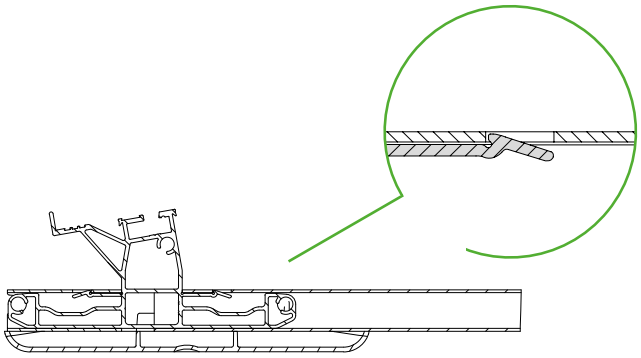

4

Set up tower **D** and rear wall tower **E** and click in.

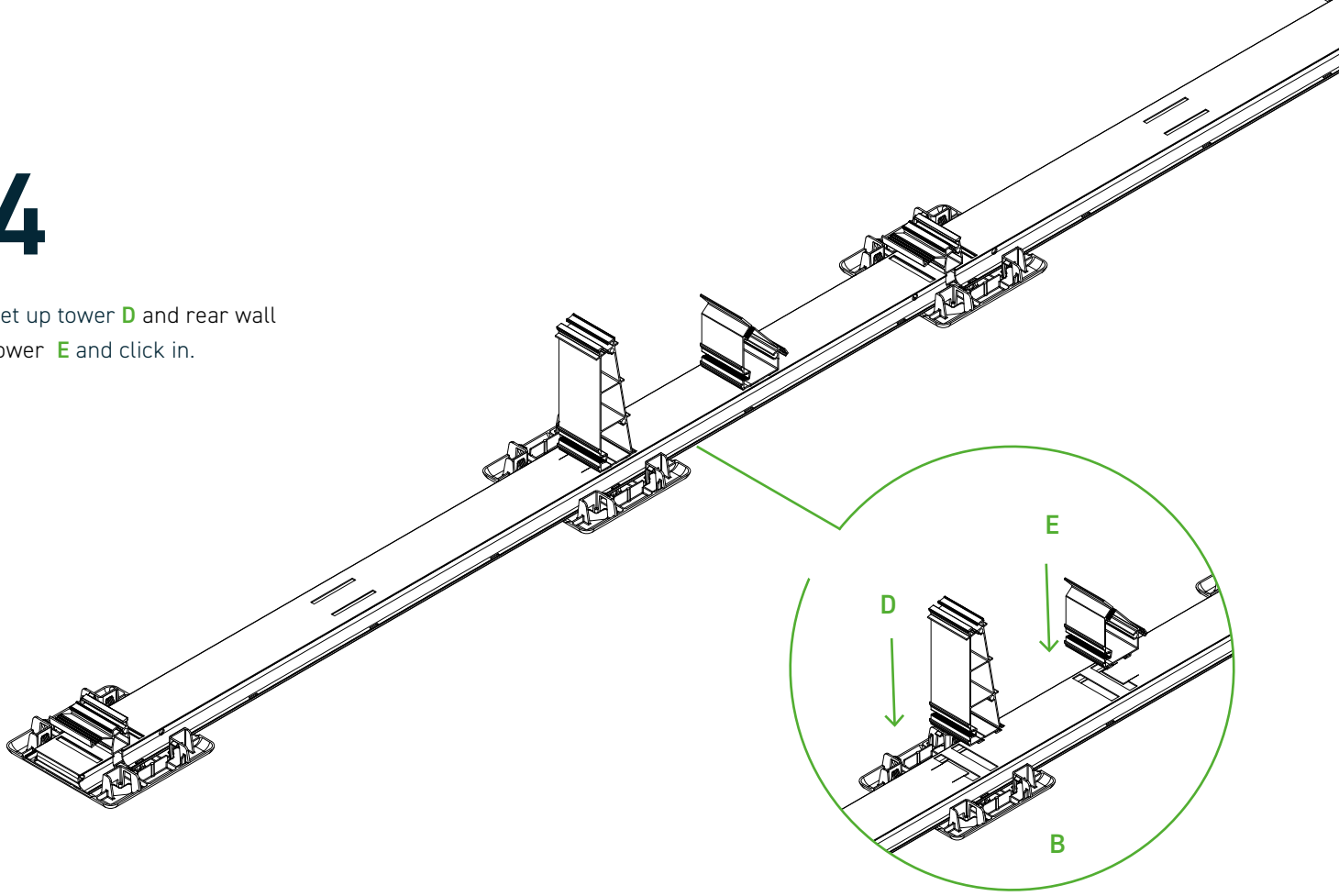

Press the tower **D** with the detents pointing away from the centre of the rail and the rear wall tower **E** with the detents pointing towards the centre of the rail vertically into the two narrow recesses of the main bottom profile **B** and click the tower towards the rear wall tower and click the rear wall tower towards the base until the click detent clicks into place with audible noise.

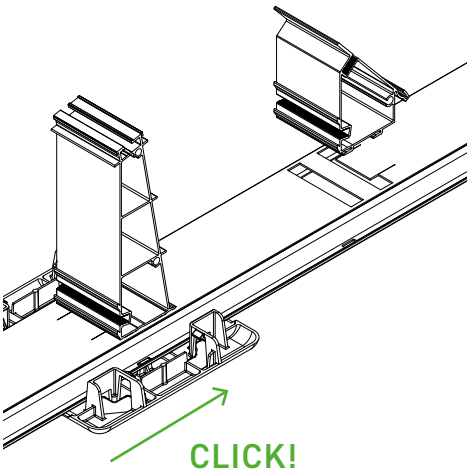

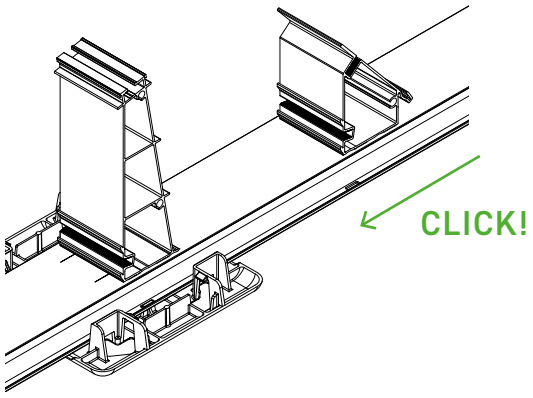

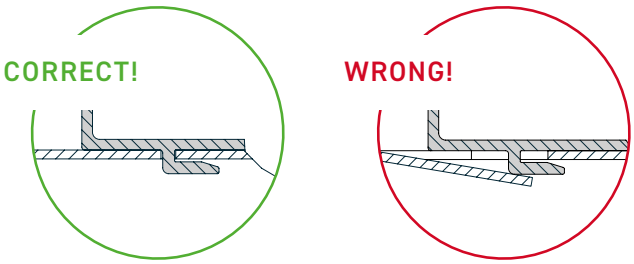

The detent connection must be checked for a clean fit and form fit (detent lug must be flush with the surface).

5

Mount the transverse and ballast strut **F** with the transverse strut connector **G**.

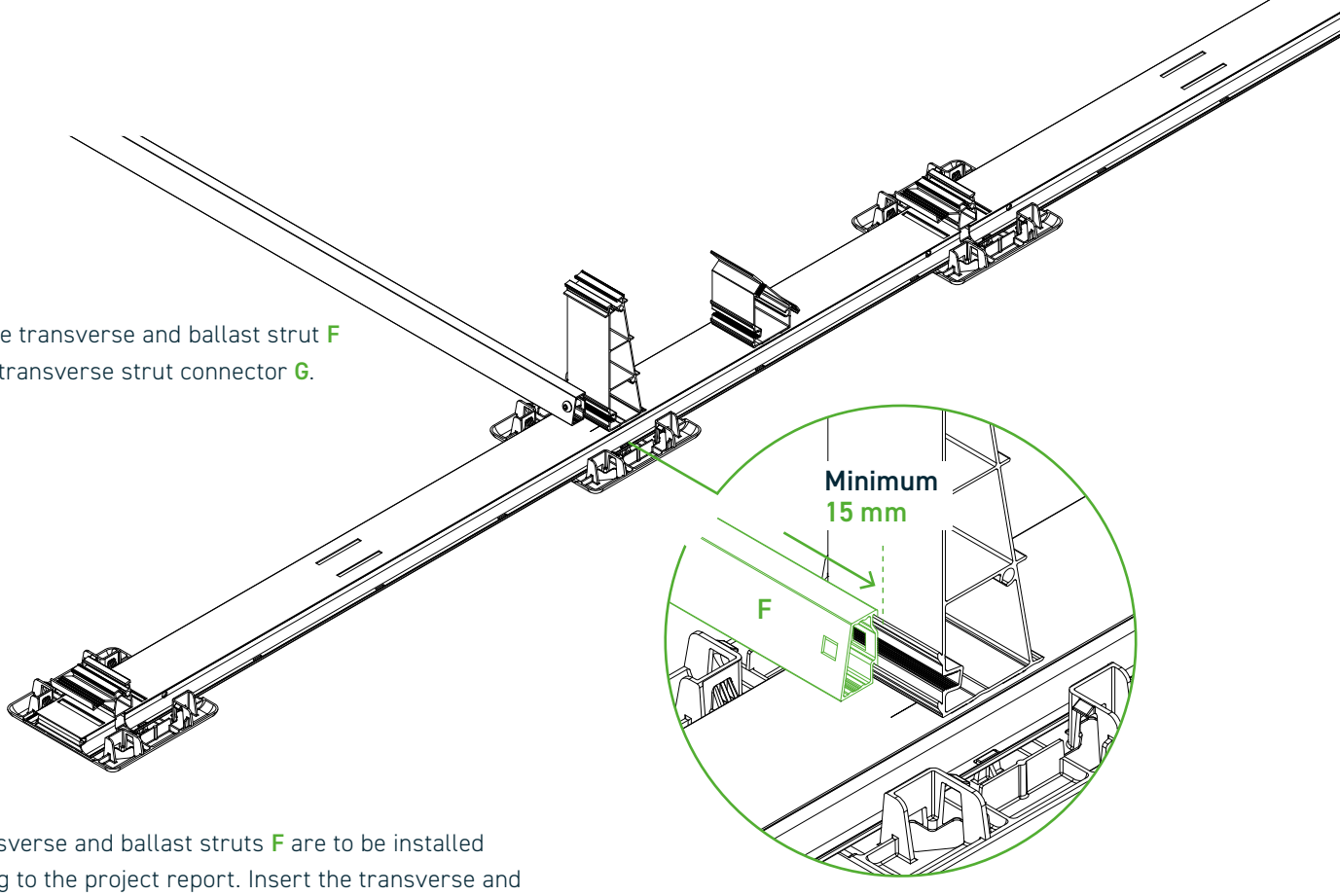

The transverse and ballast struts **F** are to be installed according to the project report. Insert the transverse and ballast strut **F** centrally between the components tower **E** into the mounting lugs.

If no cross strut connector **G** is installed, fix the cross strut and ballast strut **F** to the tower **E** with one M8 x 30 screw each.

5.1

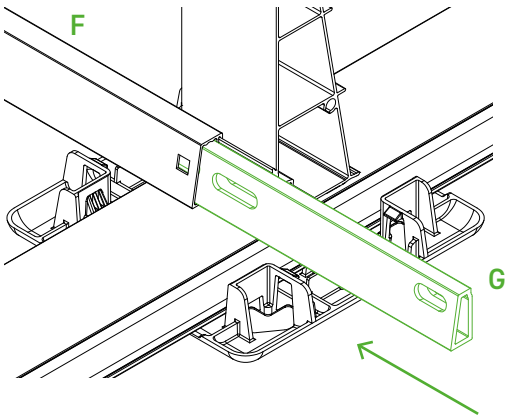

5.2

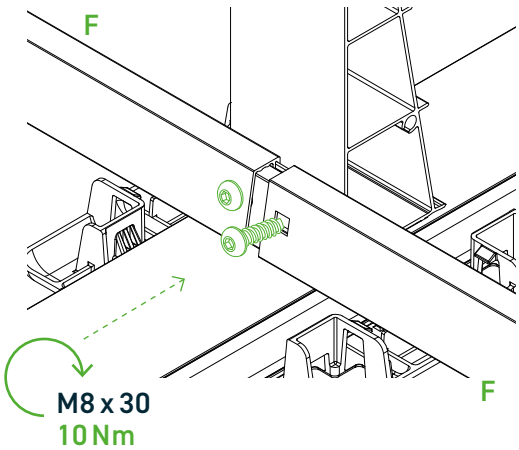

The cross strut connector **G** must be installed at the specified locations according to the project report. This is to be pushed halfway into a transverse and ballast strut **F**. The following transverse and ballast strut **F** is to be pushed over the transverse strut connector. The component combination is attached to the tower **D** with two M8 x 30 screws.

Attention!! The positioning of the ballast clamps may differ!
Please refer to your current project report under elevation parameters for the respective roof.

6

Possibilities of positioning the ballast bricks **H.**

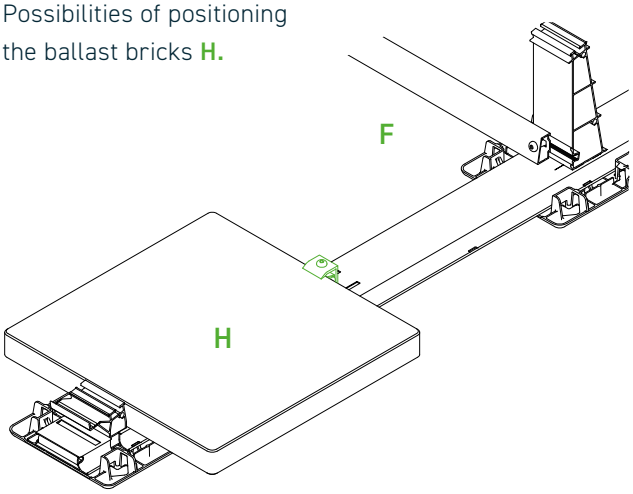

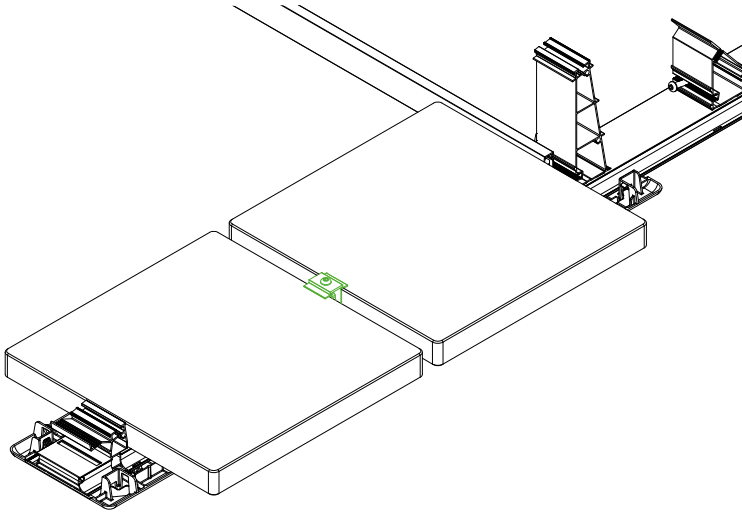

1st Possibility: Place 1 ballast brick

in the middle of each main bottom profile, push to the base and secure with ballast end clamp.

2nd Possibility: Place 2 ballast bricks

per main bottom profile centrally on the rail and secure with ballast centre clamp.

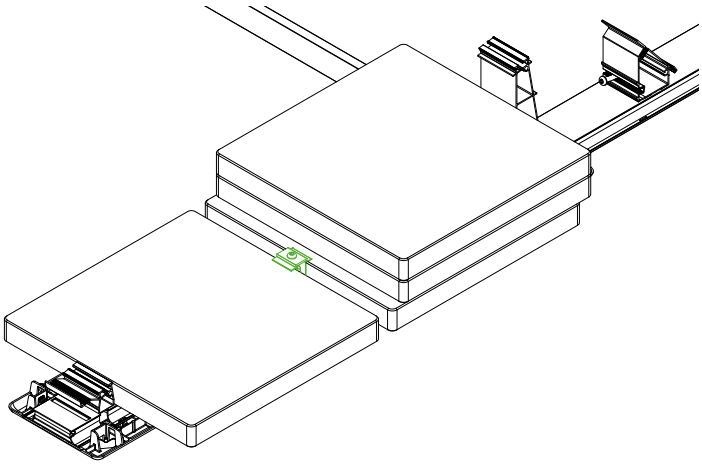

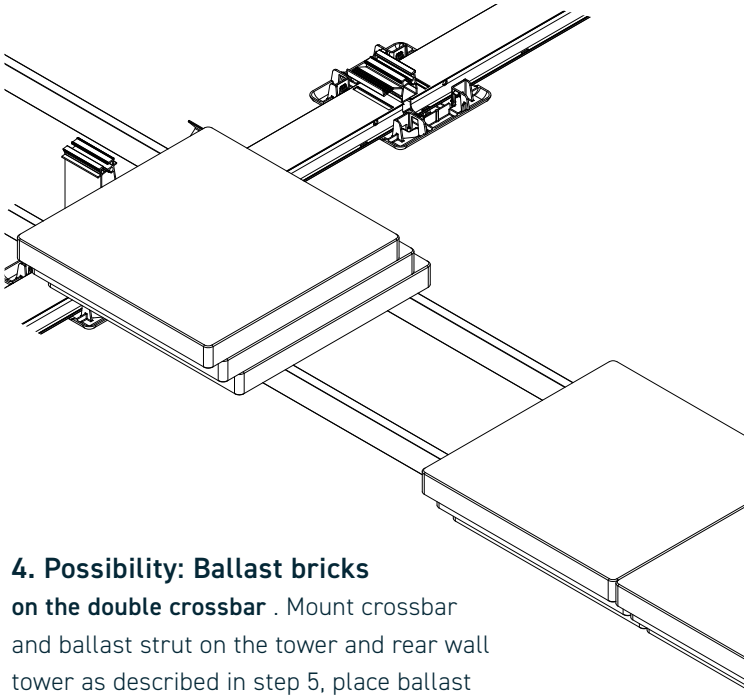

3. Possibility: 3 – 4 ballast bricks

per main bottom profile. Secure ballast brick 1+2 with ballast centre clamp as described, place ballast brick 3+4 and push to the tower.

4. Possibility: Ballast bricks

on the double crossbar . Mount crossbar and ballast strut on the tower and rear wall tower as described in step 5, place ballast bricks evenly distributed on the crossbars near the tractor.

A maximum of 135 kg (15 kg per brick)

for each ballast strut arrangement, the number, position and weight of the required ballast bricks can be found in the current project report.

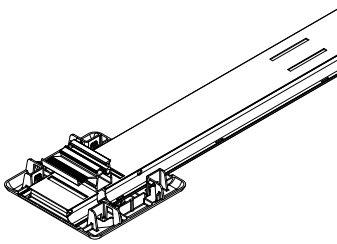

7.1

Install modules and install and screw module clamps I.

Place modules and ensure sufficient fit on the tower D component. Ensure that the centre and end clamps I rest on the module in a flat and clean manner.

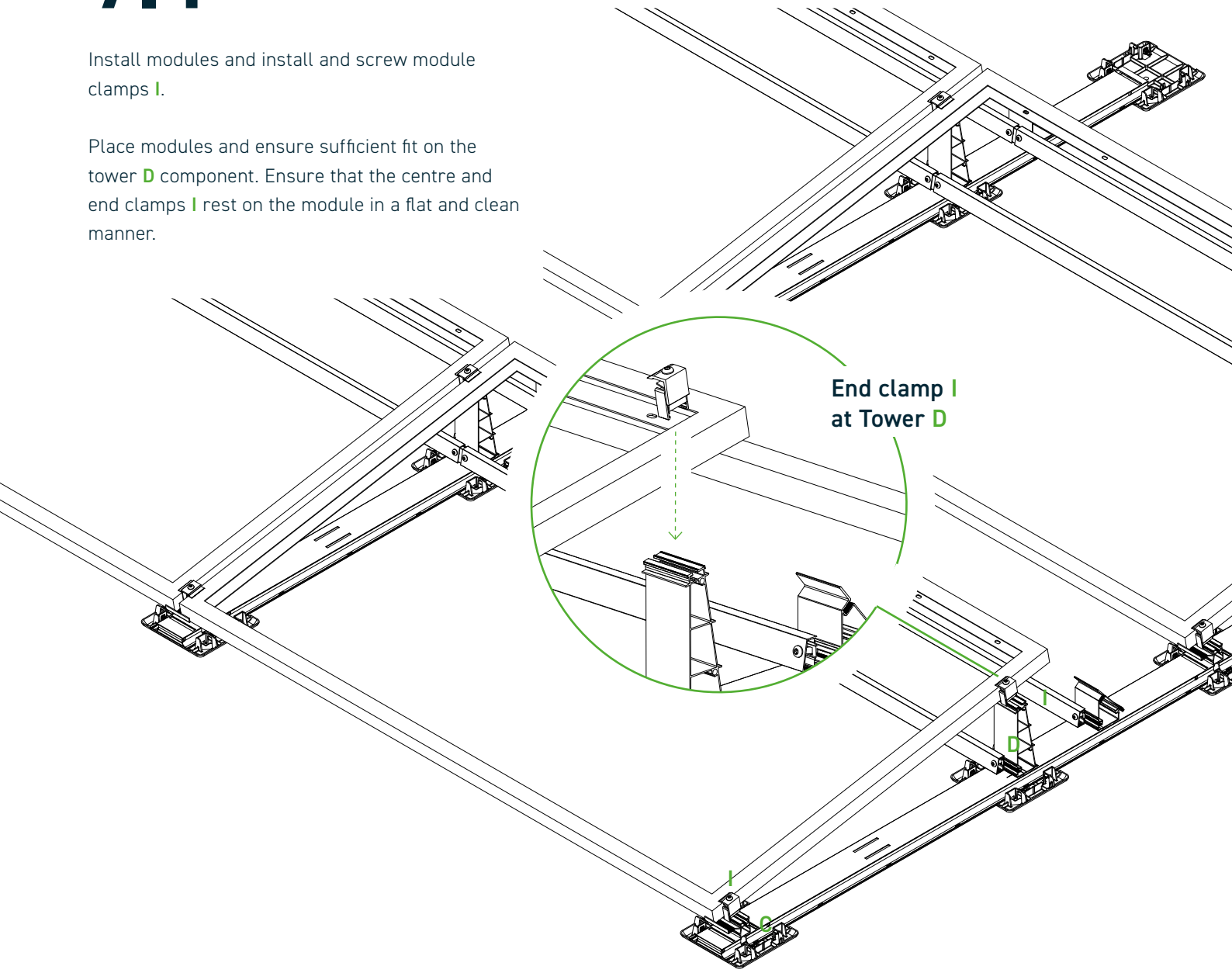

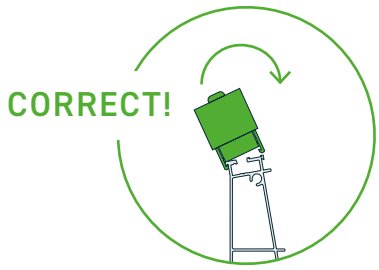

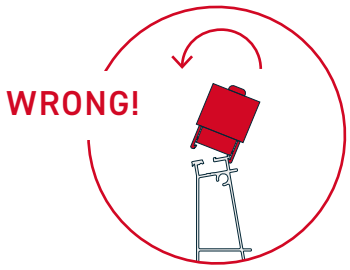

Attach the centre and end clamps I on the side of the tower D facing the base C to the lower guide groove and press them onto the opposite guide groove until the click lock engages with an audible noise.

Ensure that the centre and end clamps I fit securely and flush in the guide grooves.

7.2

Place modules and install and screw module clamps **I**.

Place modules and ensure sufficient fit on the base **C** component. Ensure that the centre and end clamps **I** rest on the module in a flat and clean manner.

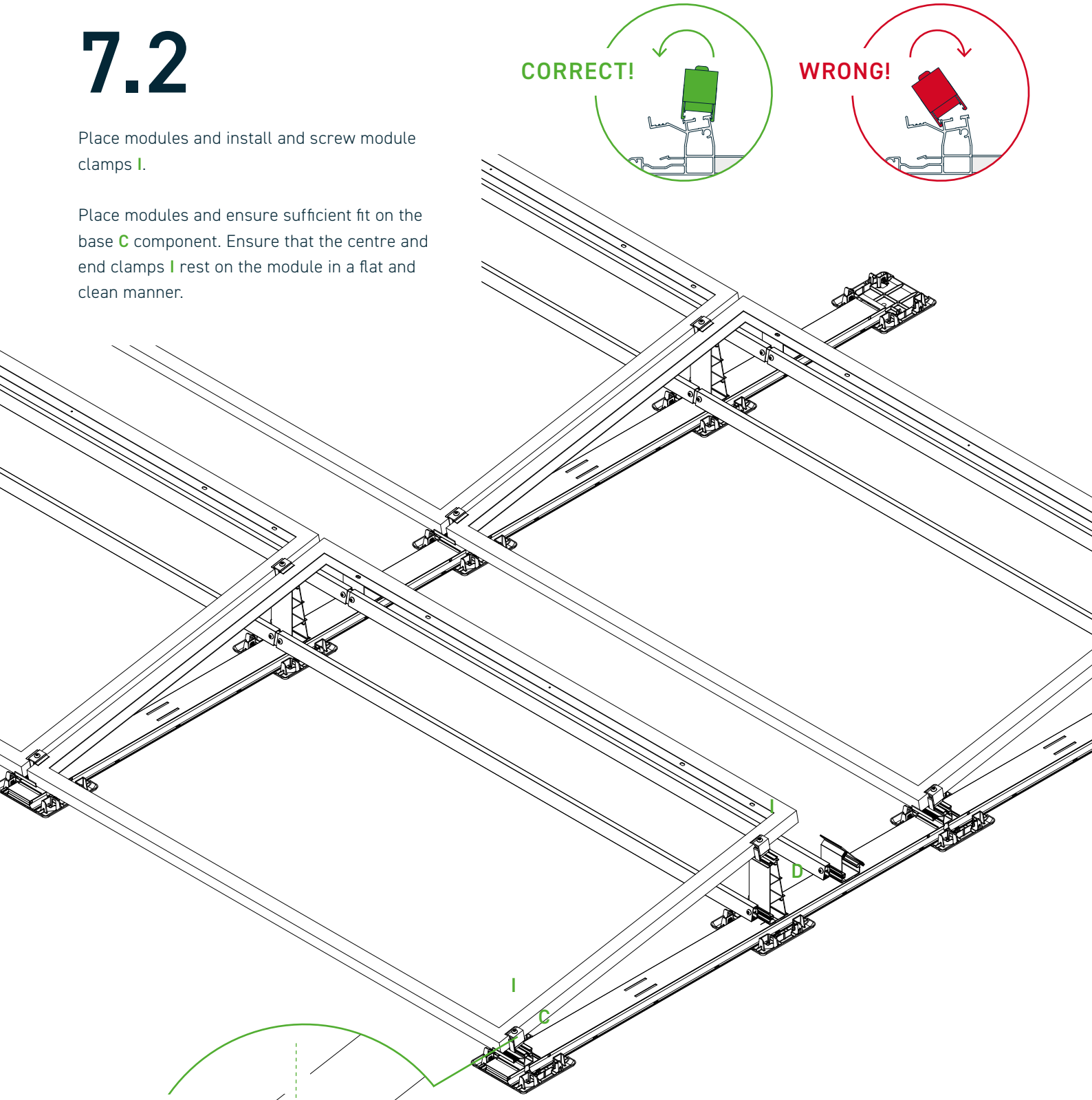

End clamp I on base C

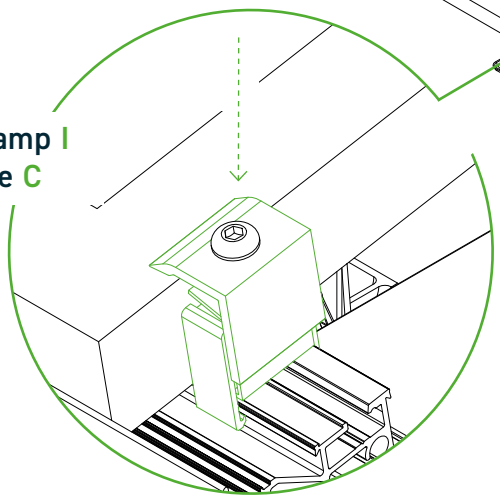

Place the centre and end clamps **I** on the side of the base **C** facing the tower **D** to the upper guide groove and press them onto the opposite guide groove until the click lock engages with an audible noise. Ensure that the centre and end clamps **I** fit securely and flush in the guide grooves.

7.3

Tighten the terminal screws.

The installation instructions of the module manufacturers must be observed.

Observe a tightening torque of 10 Nm.

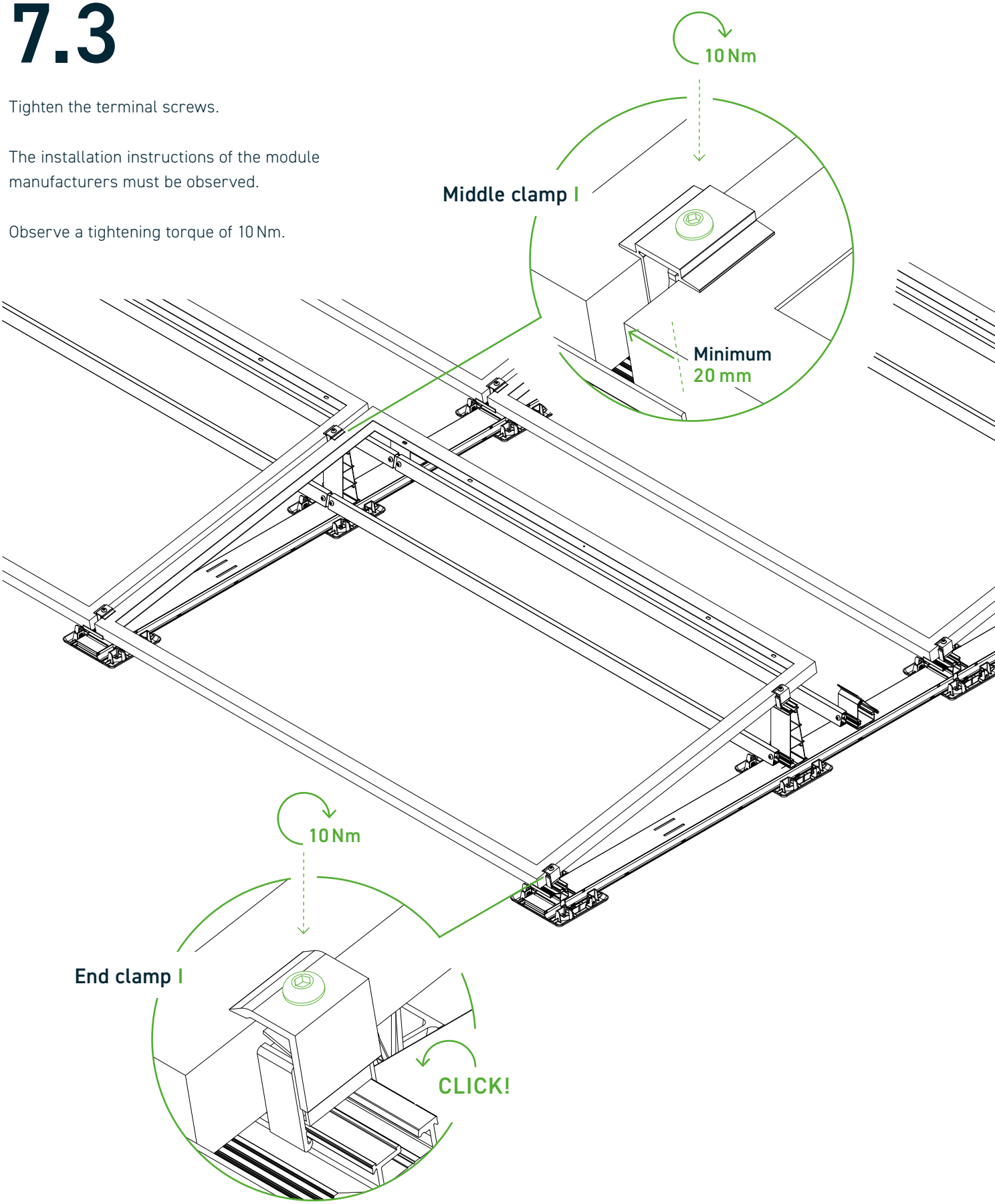

8

Mount and screw the rear panel **J** to the rear wall tower **E**.

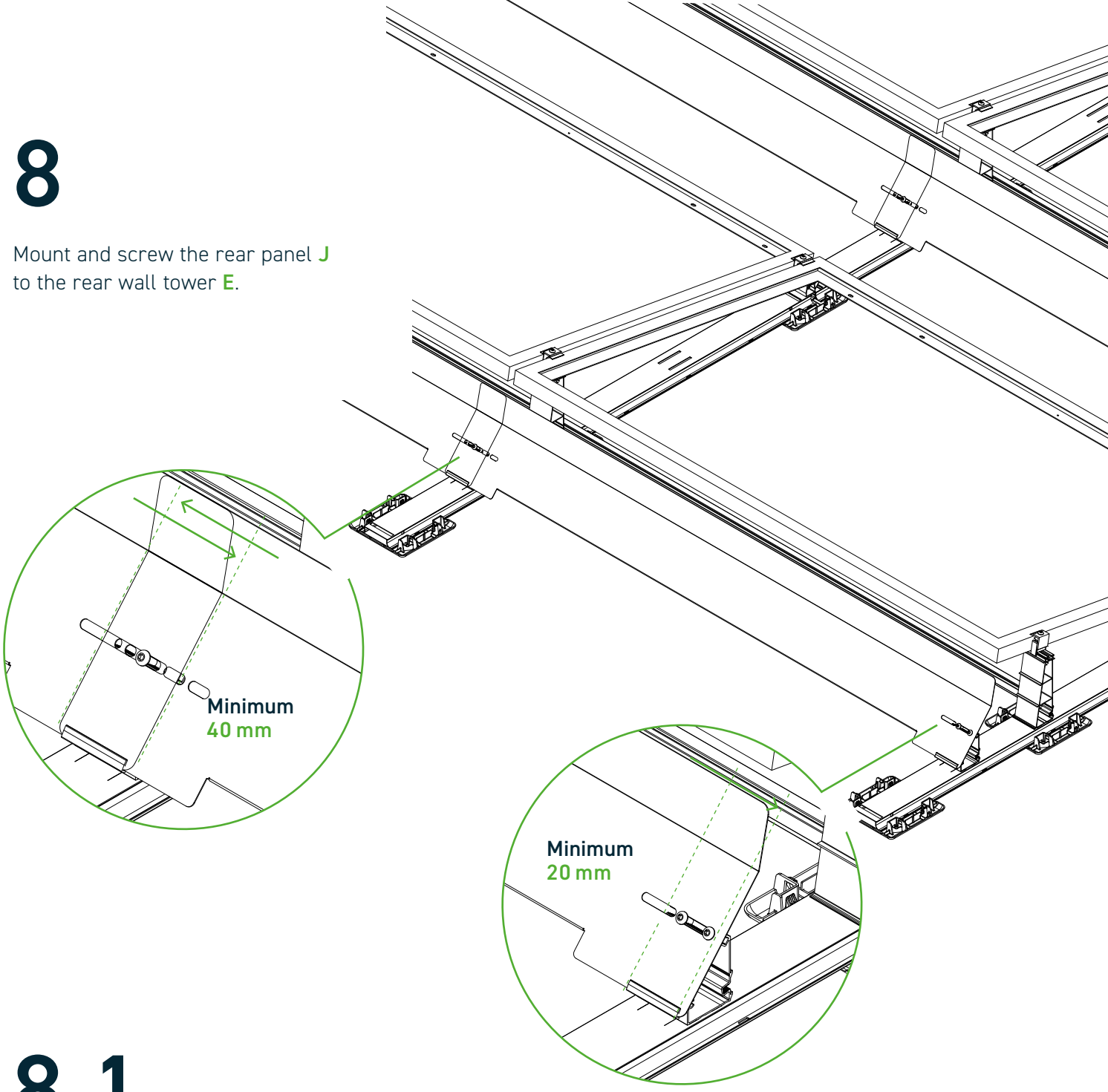

8.1

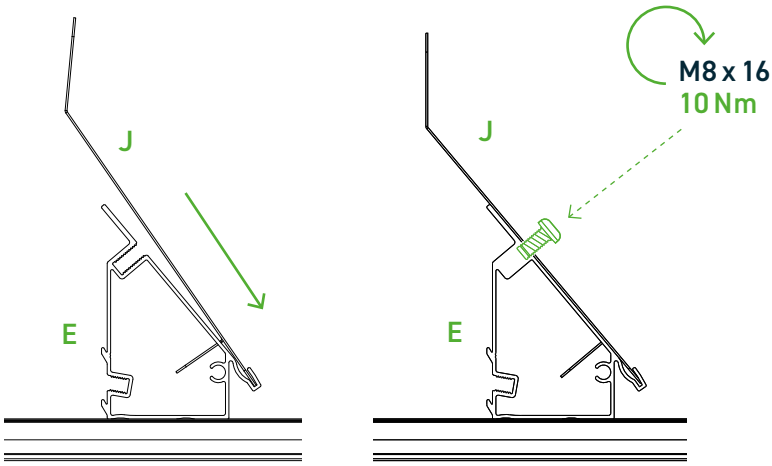

DONE WITH THE BASIC SYSTEM!

Attention! Some components are available in different lengths and designs.
The exact item details can be found in the project documents.

Optional component types

1 ProPlate Gravel

PE-HD

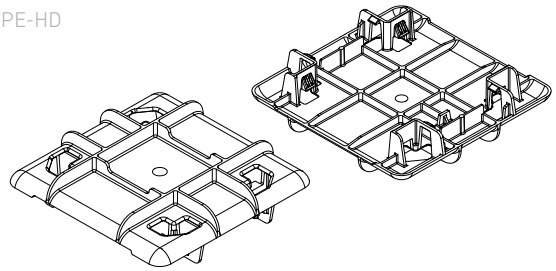

2 Cable duct cover

Aluminium EN-AW-6063 T6

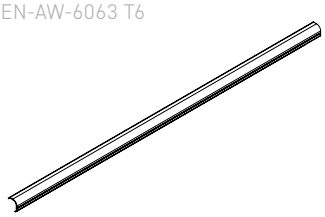

3 Ridge connector in module direction, screw M8 x 30

aluminium EN-AW-6063 T6

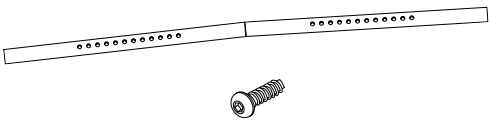

4 USO connection

AlMg3 H22 (EN AW-5754) (USO sheet)

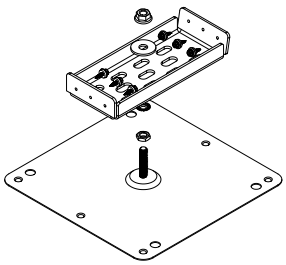

5 Ballast tray V01 and V02, drilling screws

PE UV-resistant

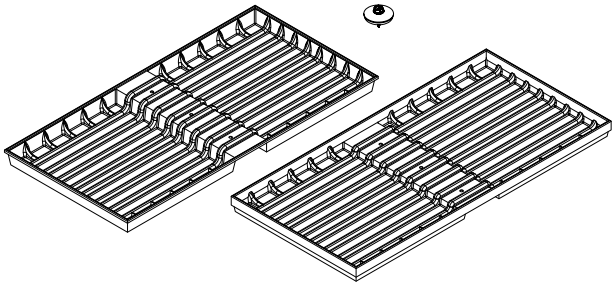

6 Side cover, screw M8 x 16

AlMg3 H22 (EN AW-5754)

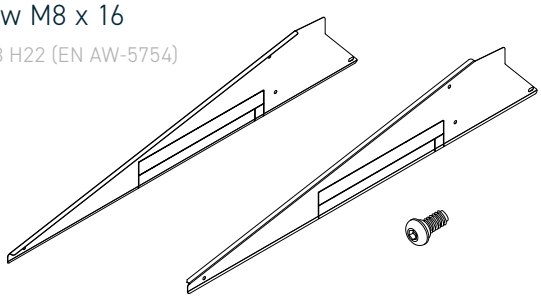

7 Track connection in rail direction, screw M8 x 16

AlMg3 H22 (EN AW-5754)

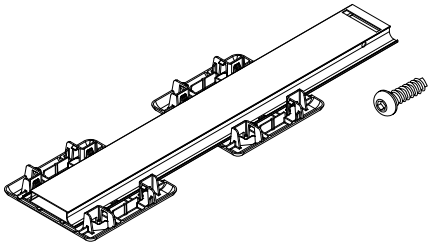

8 Track connection in module direction, screw 4.8 x 19

3.3206 - EN AW 6060 T66 (EP)

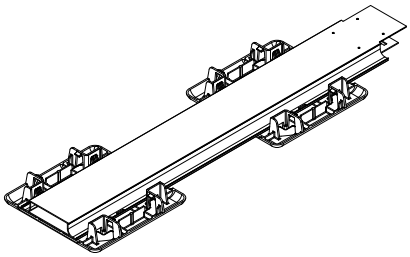

Attention! Some components are available in different lengths and designs.
The exact item details can be found in the project documents.

Optional component types

9 Centre support,
screw M8 x 16

AlMg3 H22 (EN AW-5754)

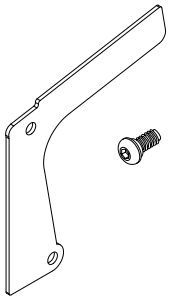

10 Bracket for irradiation sensor,
screw M8 x 16

AlMg3 H22 (EN AW-5754)

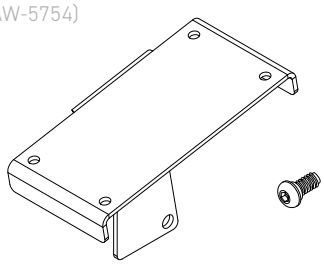

11 Mounting adapter for crossbar and ballast strut

aluminium EN-AW-6063 T6

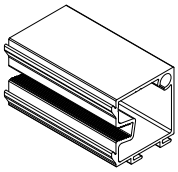

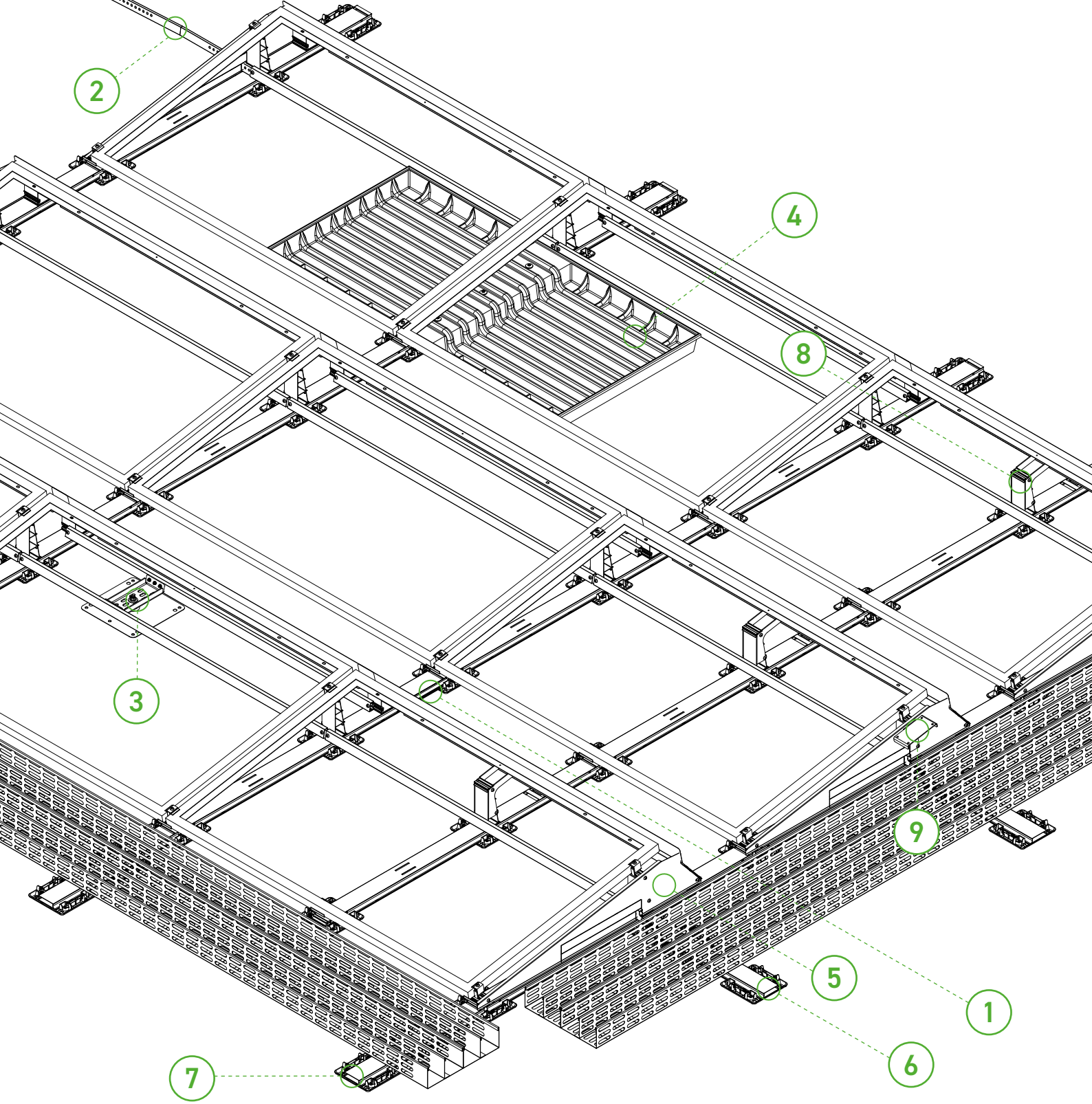

1 Cable duct cover

2 Ridge connector in module direction

3 USO connection

4 Ballast tray V01 and V02

5 Side cover

6 Track connection in module direction

7 Track connection in rail direction

8 Centre Support

9 Irradiation Sensor Bracket

Installation of special components

Optional assembly steps:

1 ProPlate Gravel

2 Cable duct cover

3 Ridge connector in module direction

4 USO connection

5 Ballast tray type V01

6 Ballast tray type V02

7 Mounting the side covers

8 Track connection in module direction

9 Track connection in rail direction

10 Centre support

11 Mounting for irradiation sensor

12 Mounting adapter for crossbar and ballast strut, screw-on point for side cover

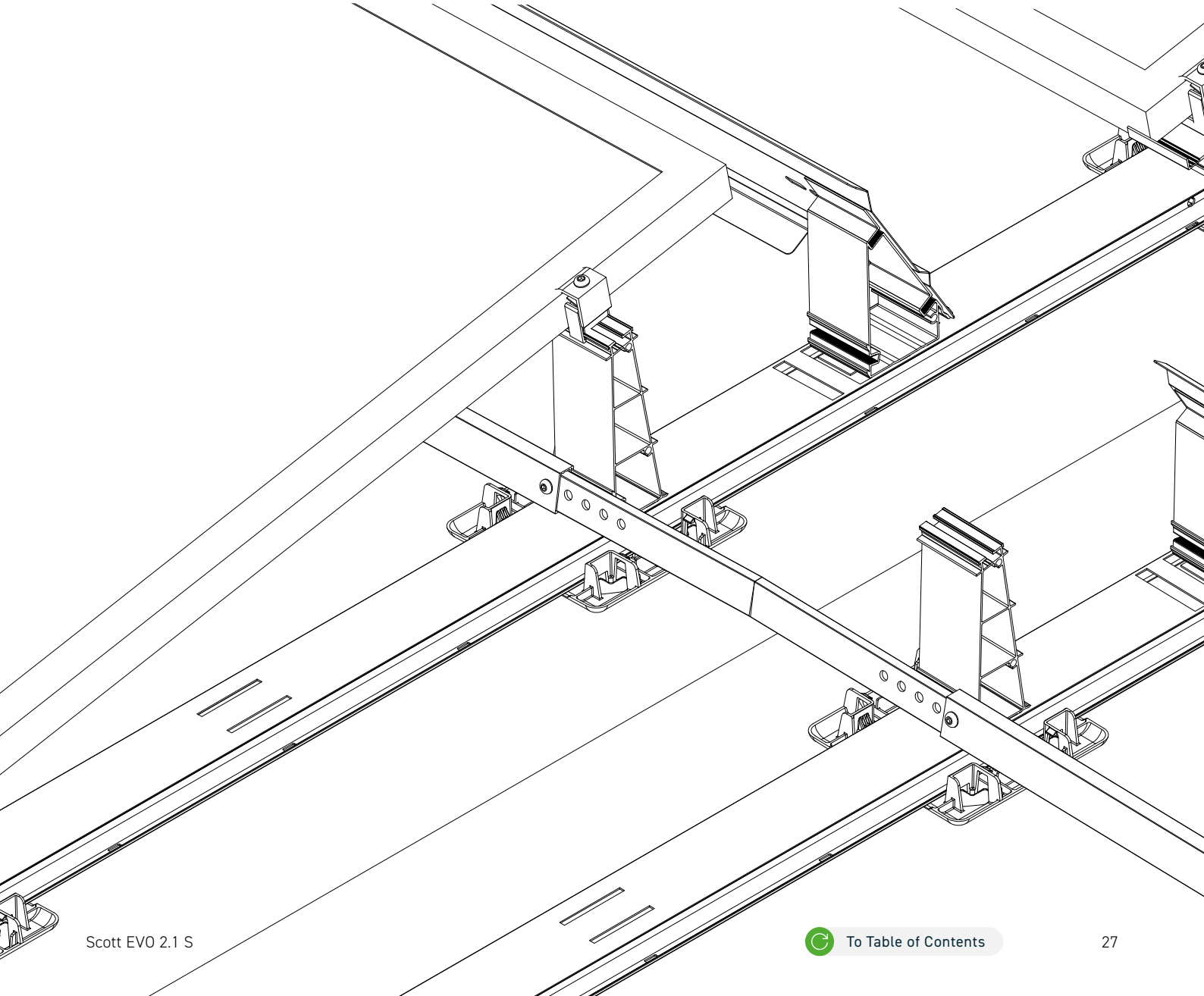

1

OPTIONAL ASSEMBLY STEP **PROPLATE GRAVEL**

Component
ProPlate Gravel

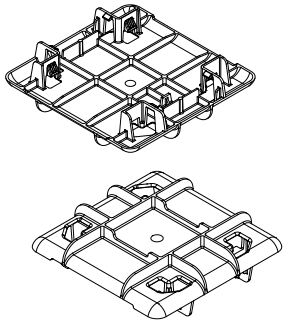

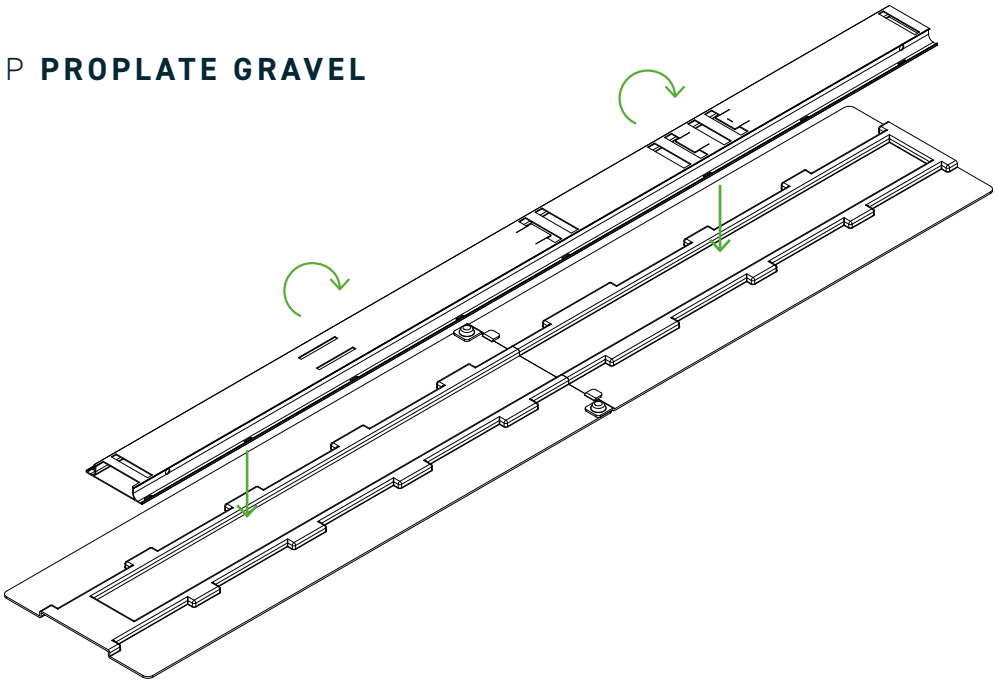

Turn the main floor profile over and place it upside down in the ClickGuide ReUse. Then position the ProPlates Gravel and snap in place. The exact placement of the ProPlates Gravel can be found in the data sheet with the corresponding assignment variants.

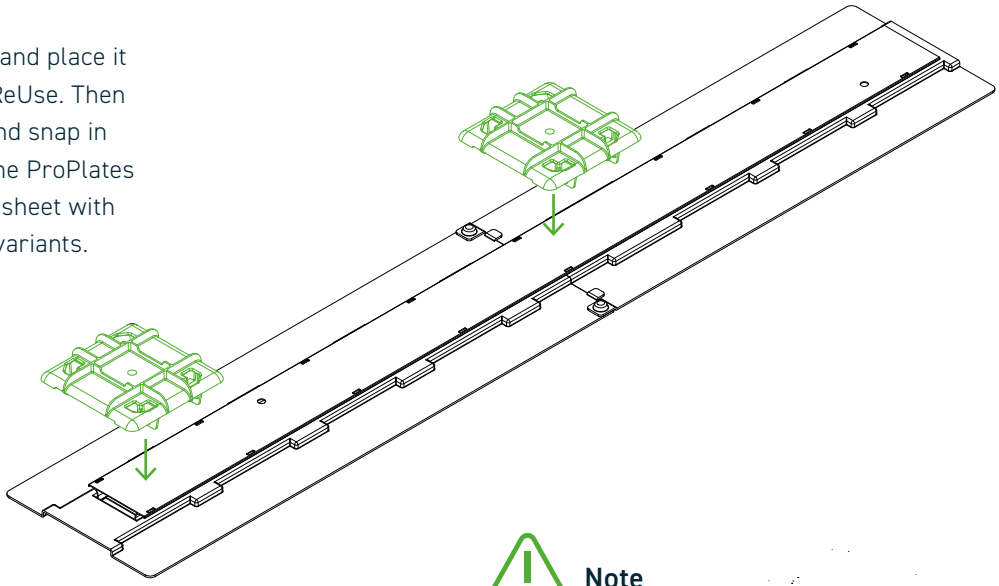

Note
Click Guide ReUse and Click Guide can be used for both ProPlates Gravel and ProPlates.

Installing ProPlates

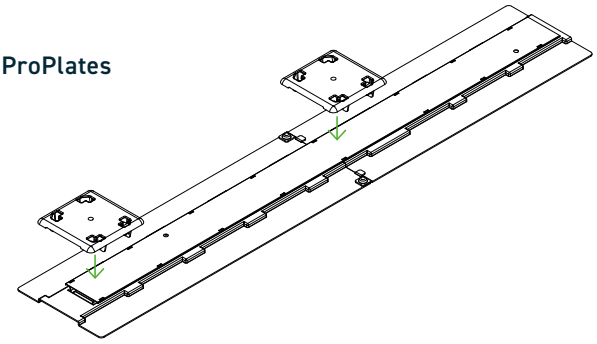

Attention!
The application of the Click Guide and the ProPlates can be found on page 13.

2

OPTIONAL ASSEMBLY STEP **CABLE DUCT COVER**

Component
cable duct cover

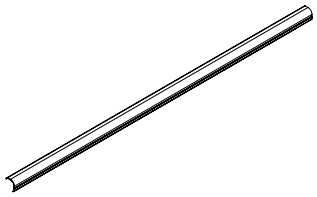

Required Tool
rubber hammer

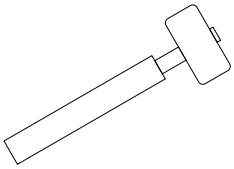

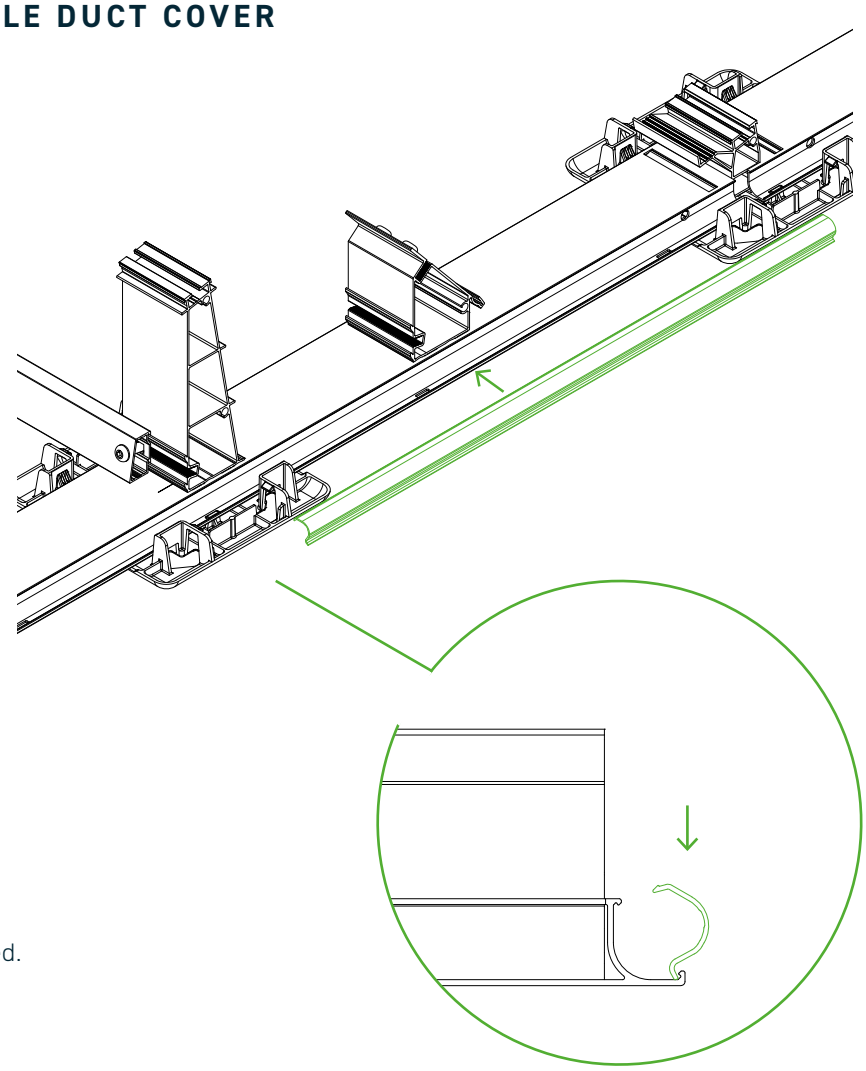

Attention!
When attaching the cable duct cover, make sure that the lines are not damaged.

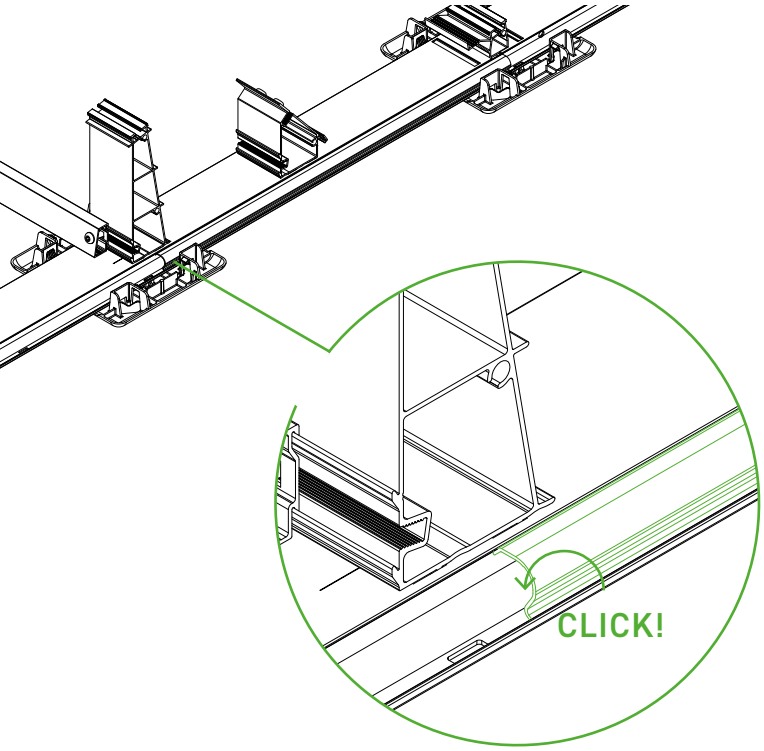

At the beginning, check the clean position and durable, secure fastening of the string lines to avoid damage to the lines due to movements (wind).

Attach the cable duct cover in the lower guide groove to the main bottom profile and tilt over to the upper guide groove. Now load the cable duct cover in the middle until the click lock engages with an audible noise.

3

OPTIONAL ASSEMBLY STEP

RIDGE CONNECTOR IN MODULE DIRECTION

Component

Ridge connector in module direction

Required tool

Torque wrench with hexagon socket SW 5 mm

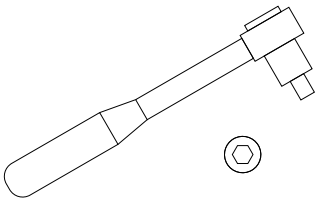

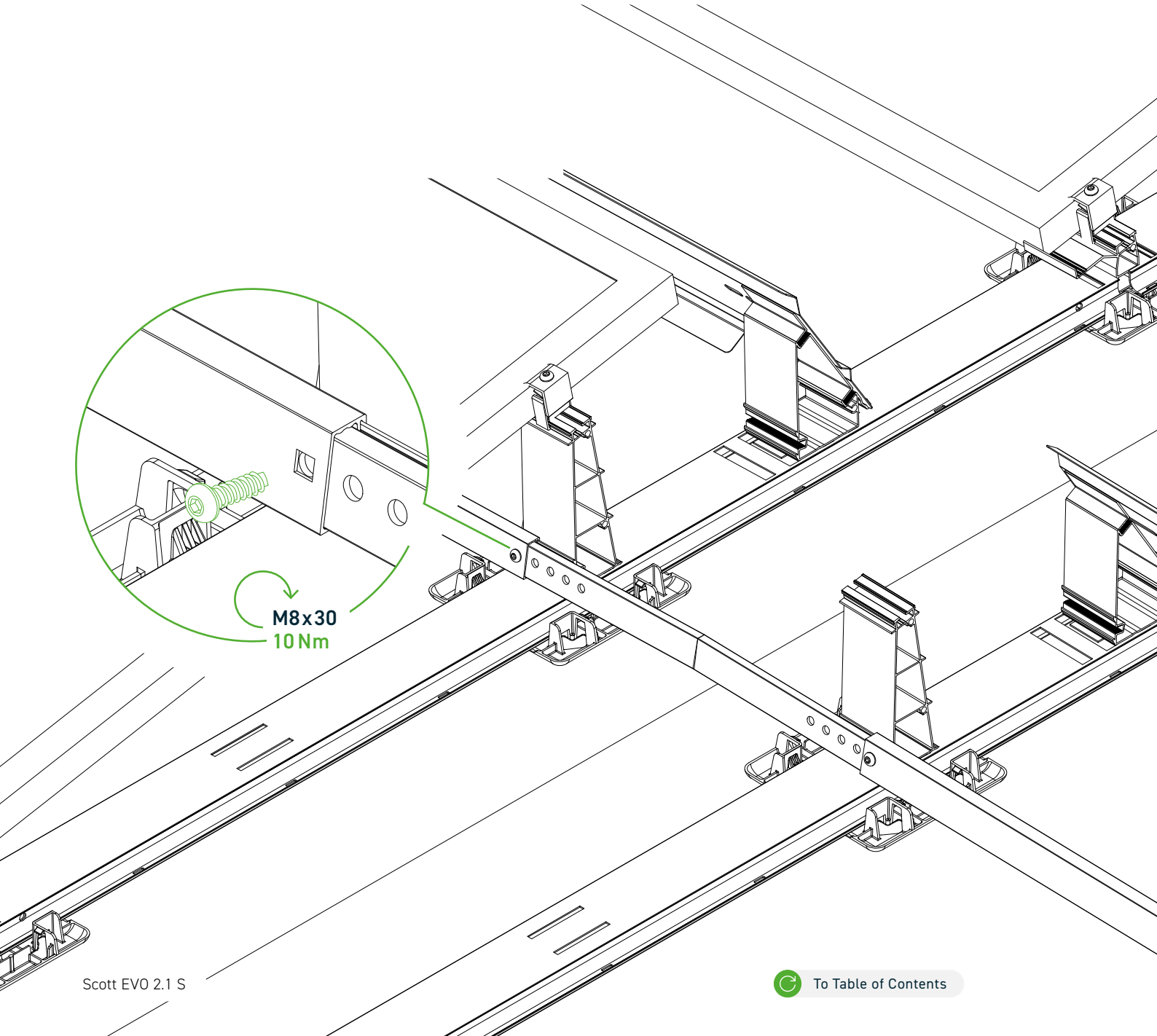

SUPERSTRUCTURE OF THE RIDGE
WITHOUT ADDITIONAL COMPONENTS

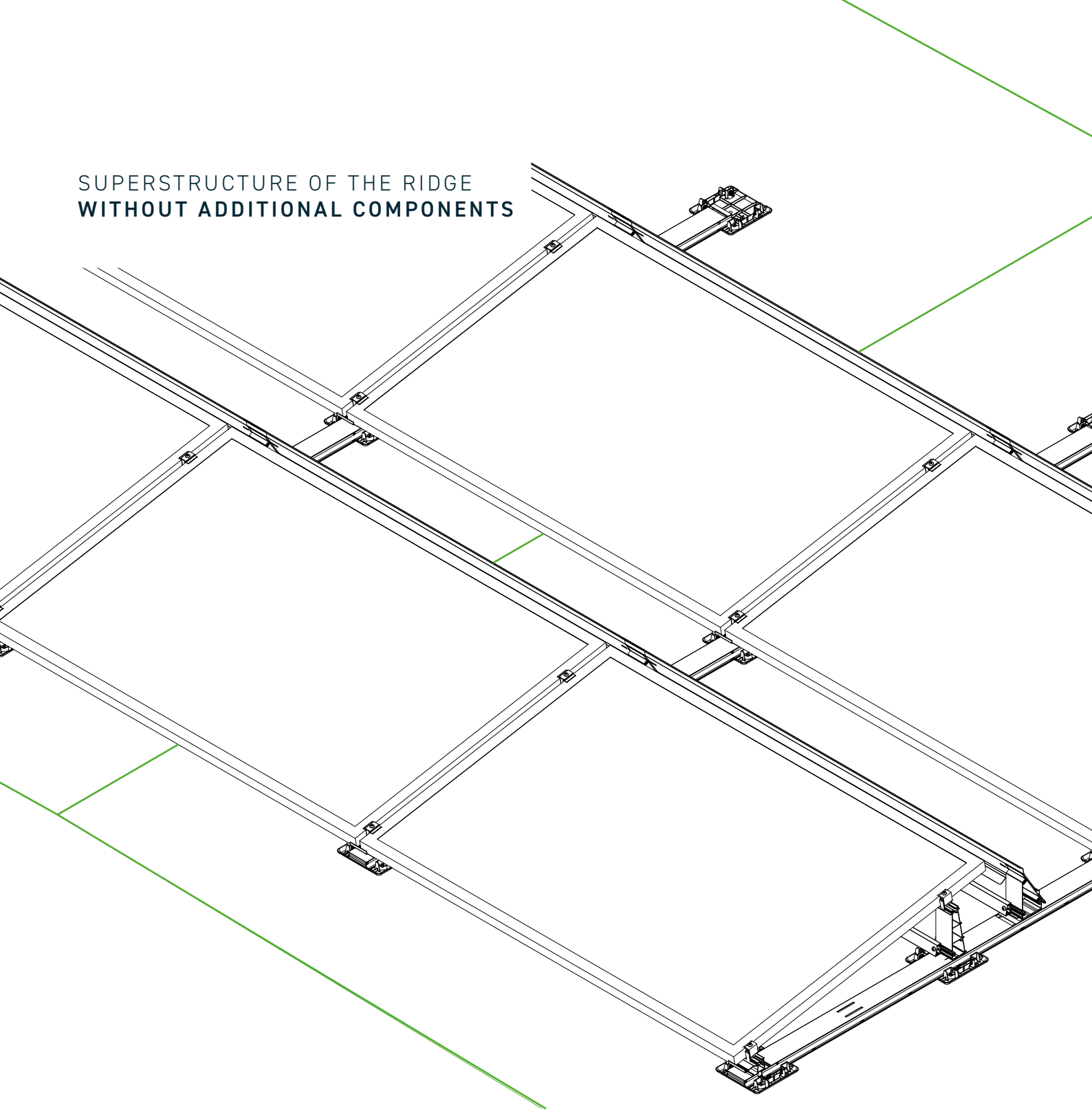

First, the ridge line is determined. Subsequently, the main bottom profiles are built up (parallel to the ridge). Cross and ballast struts are inserted centrally between the Tower components in the suspension lugs. Instead of the cross strut connector, the ridge connector is installed. The assembly should be carried out uniformly on both sides in order to prevent unilateral loading and thus slippage. The location and position of the ridge connectors can always be found in the current project documents.

Attention!
Module positioned centrally above the ridge and the roof slope is <1.5 °.

4

OPTIONAL SETUP STEP **USO CONNECTION**

Component

USO connection

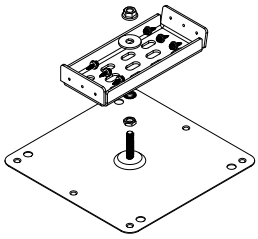

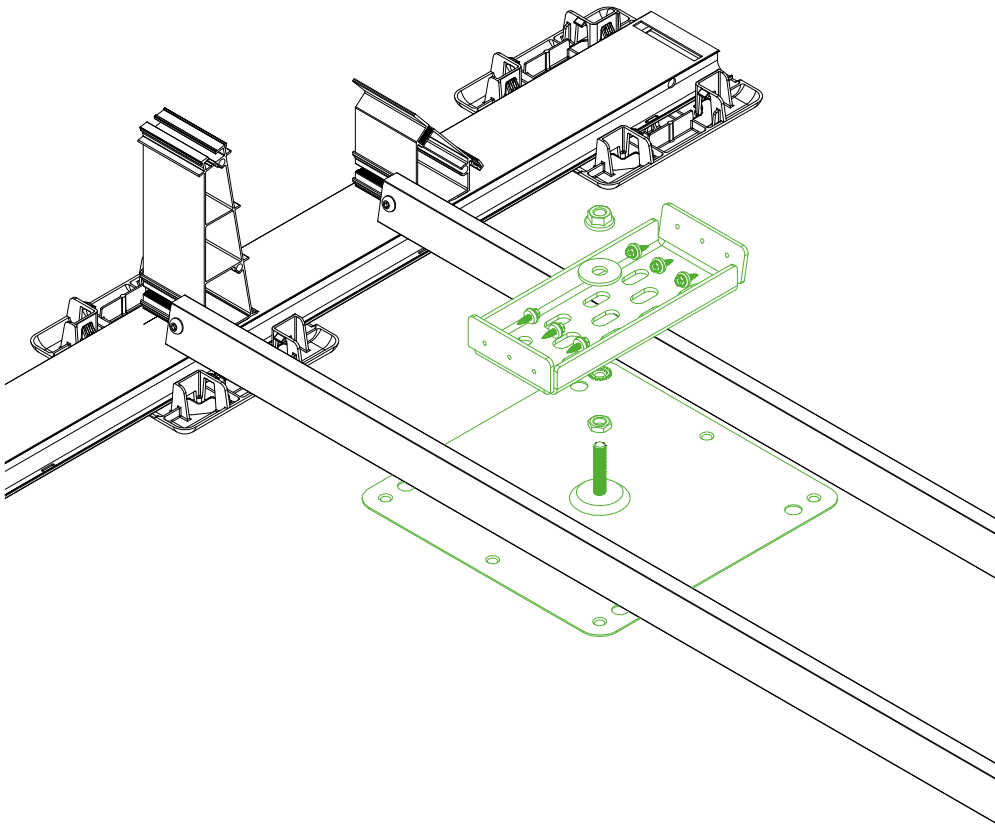

Required tool

Torque wrench with external hex socket SW 8 mm
and open-end wrench SW 18 mm

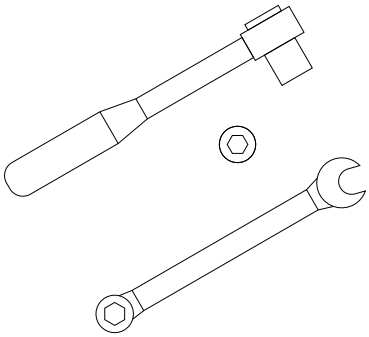

The fastening points of the USO connection should be mounted/installed on the roof before mounting the system. The attachment point should be positioned as centrally as possible between the surrounding tower or rear wall tower in the vicinity of a main bottom profile. A nut of flat design (DIN-EN-ISO 4035) and a fan washer are screwed onto the threaded bolt of the fastening point. The fan washer later serves as a support for the uso sheet metal.

The USO plate is then pushed centrally over the threaded bolt.
The tabs are directed upwards and rest against the two transverse and ballast struts. The connection point is then secured from above with a washer and a locking toothed nut and locked from below with the flat nut.

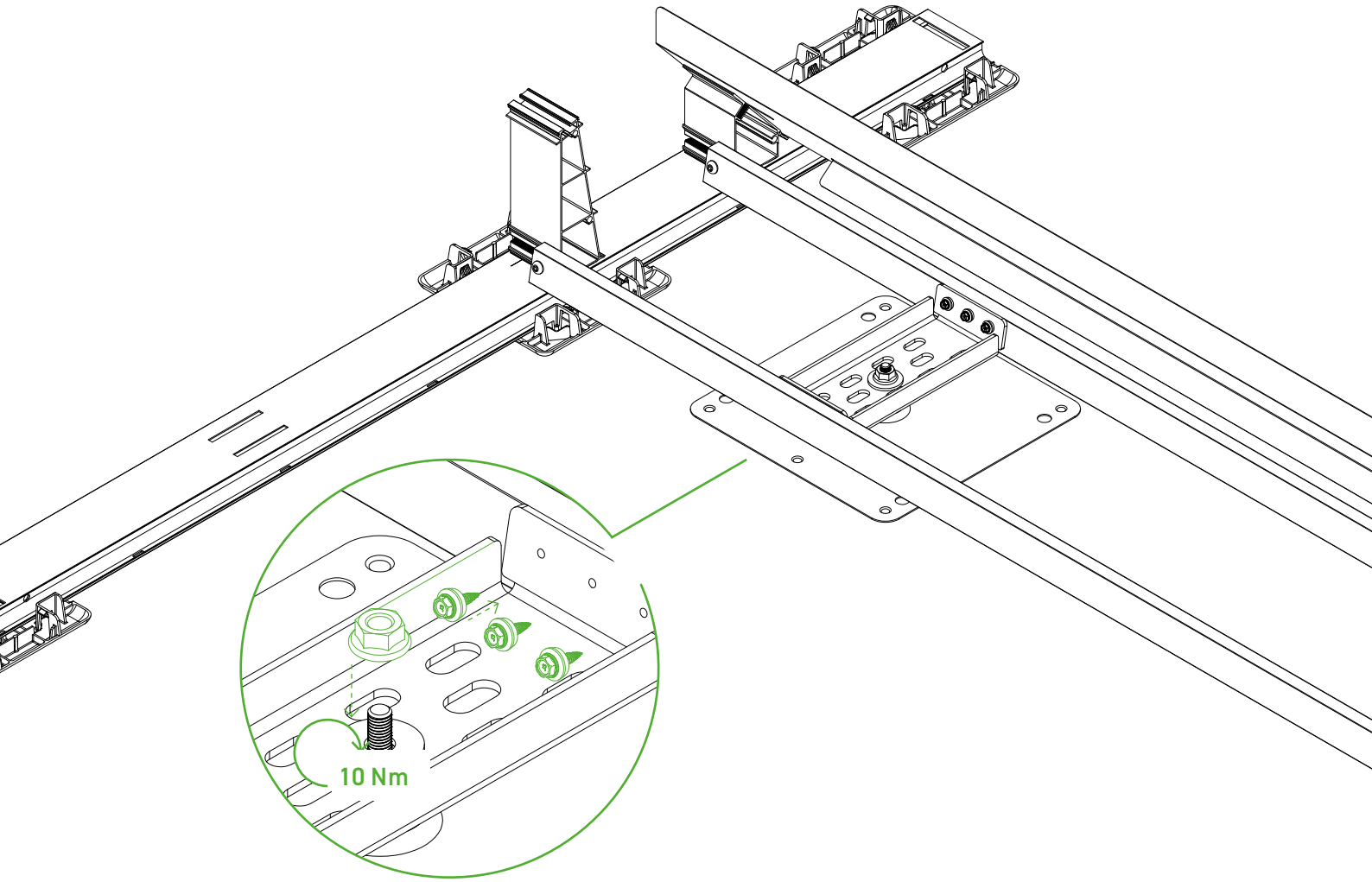

To attach the connection point to the system, three supplied drilling screws are screwed into the transverse and ballast struts on each side through the USO sheet. The location and position of the USO connection can be found in the current project documents.

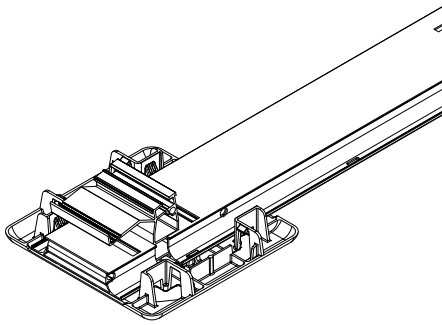

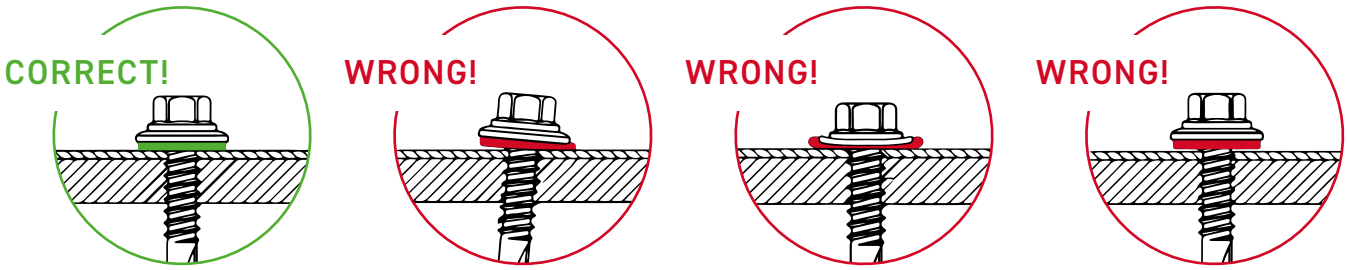

5

OPTIONAL CONSTRUCTION STEP **BALLAST TRAY TYPE V01**

for roofs with already existing gravel or substrate bulk

Component

Ballast tray V01

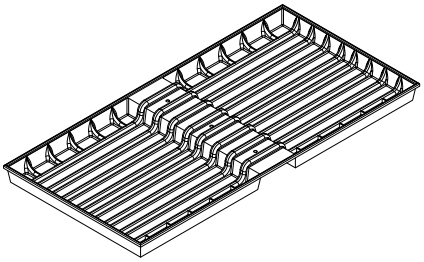

Remove gravel/substrate fill up to the inner edges of the main bottom profiles in the area between base and tower. The depth of the excavation should be at least 50 mm from the top edge of the bed, in order to ensure that the ballast tray rests flat on the remaining bed or the roof surface. When placing the ballast tray directly on the roof covering, care must be taken to ensure a clean surface in order to avoid long-term damage.

Required tool

Torque wrench with external hex socket SW 8 mm

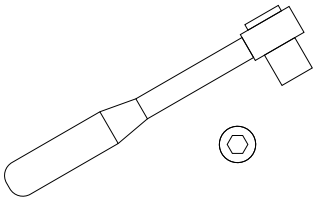

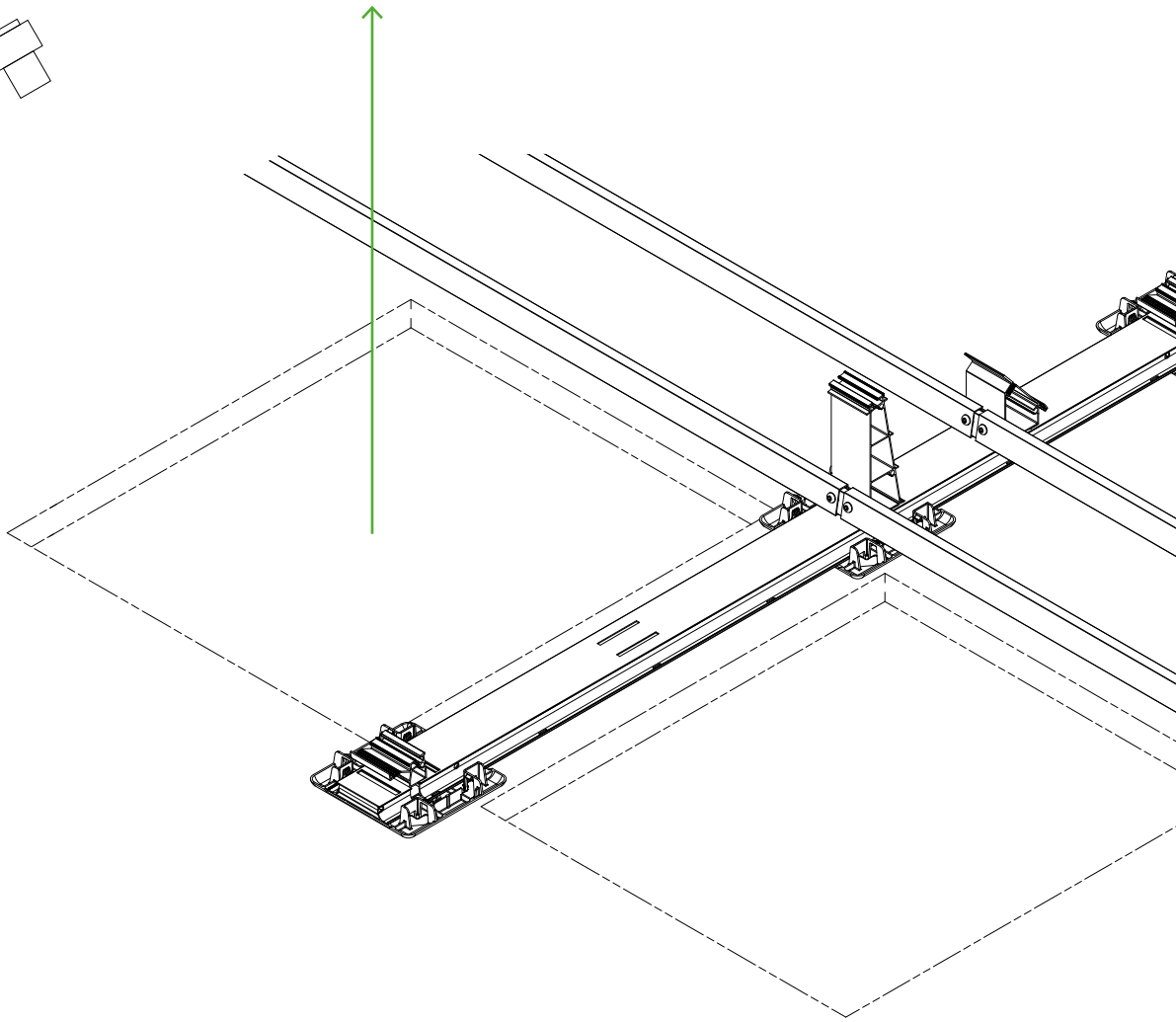

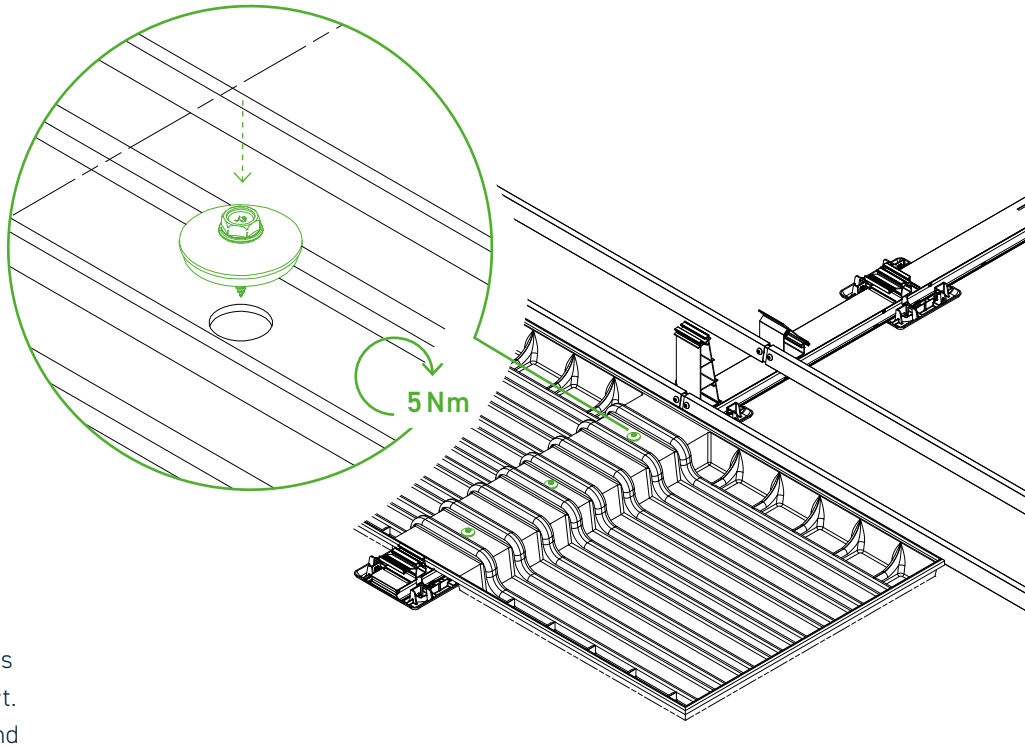

Place the ballast tray between the tower and base centrally on the main bottom profile. Exact positions of the ballast trays can be found in the current project report. Then screw each ballast tray centrally and evenly distributed on the main bottom profile by means of the supplied drilling screws (three pieces). Observe the maximum torque of 5 Nm!

Insert the bulk material back into the ballast tray in accordance with the information from the current project report. Ensure uniform coverage in the ballast tray.

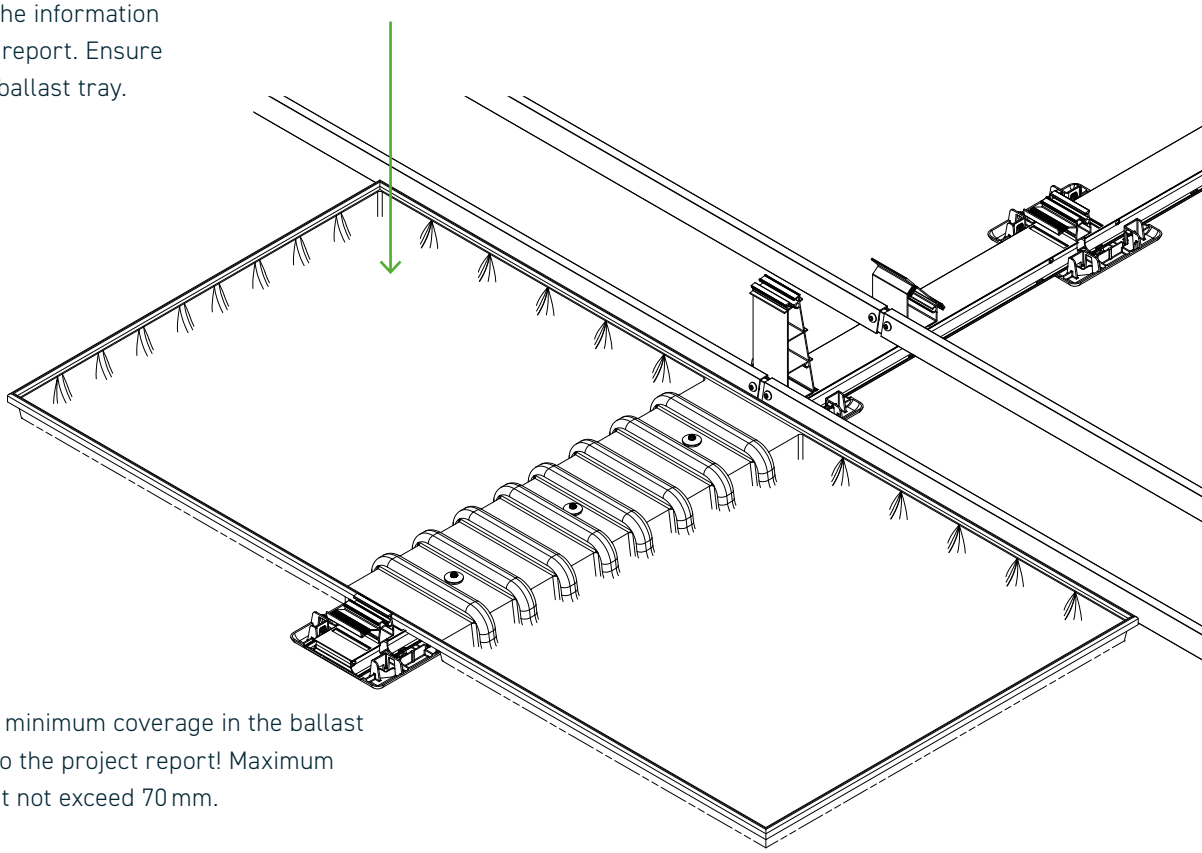

Attention!
Pay attention to minimum coverage in the ballast tray according to the project report! Maximum bulk height must not exceed 70 mm.

6

OPTIONAL MOUNTING STEP **BALLAST TRAY TYPE V02**

for roofs not yet gravelled

Component

Ballast tray V02

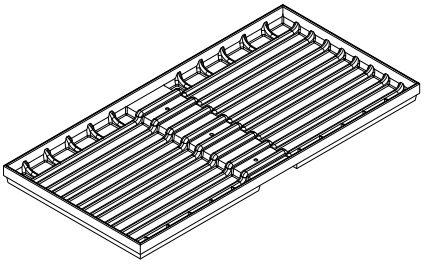

Required tool

Torque wrench with external hex socket SW 8 mm

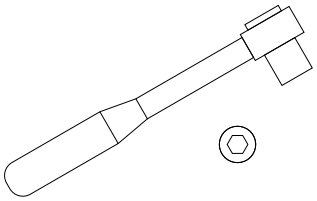

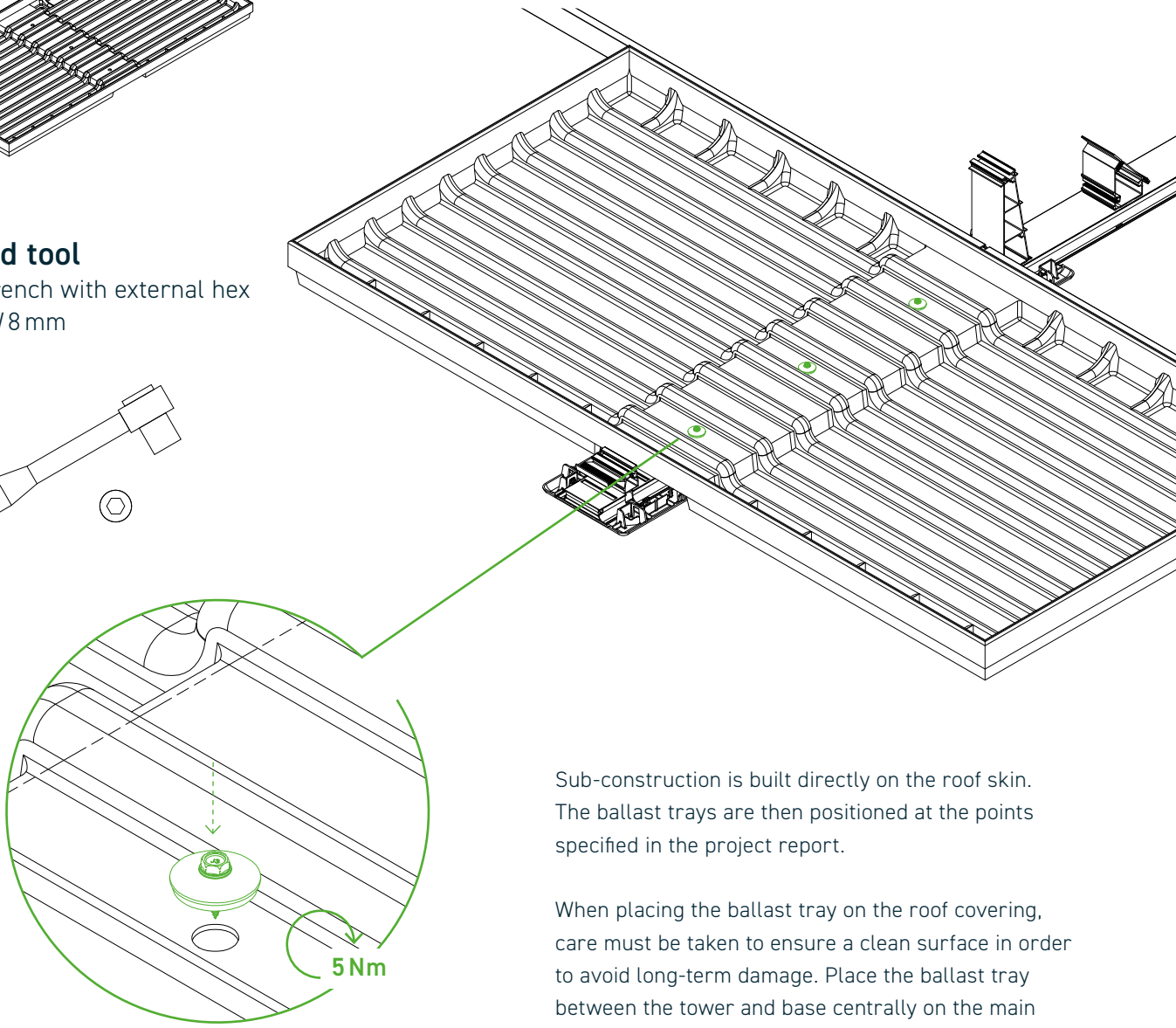

Sub-construction is built directly on the roof skin. The ballast trays are then positioned at the points specified in the project report.

When placing the ballast tray on the roof covering, care must be taken to ensure a clean surface in order to avoid long-term damage. Place the ballast tray between the tower and base centrally on the main bottom profile. Exact positions of the ballast trays can be found in the current project report. Then screw each ballast tray centrally and evenly distributed on the main bottom profile by means of the supplied drilling screws (three pieces).

Subsequently, the bed is distributed smoothly in the ballast trays and on the bottom profiles.

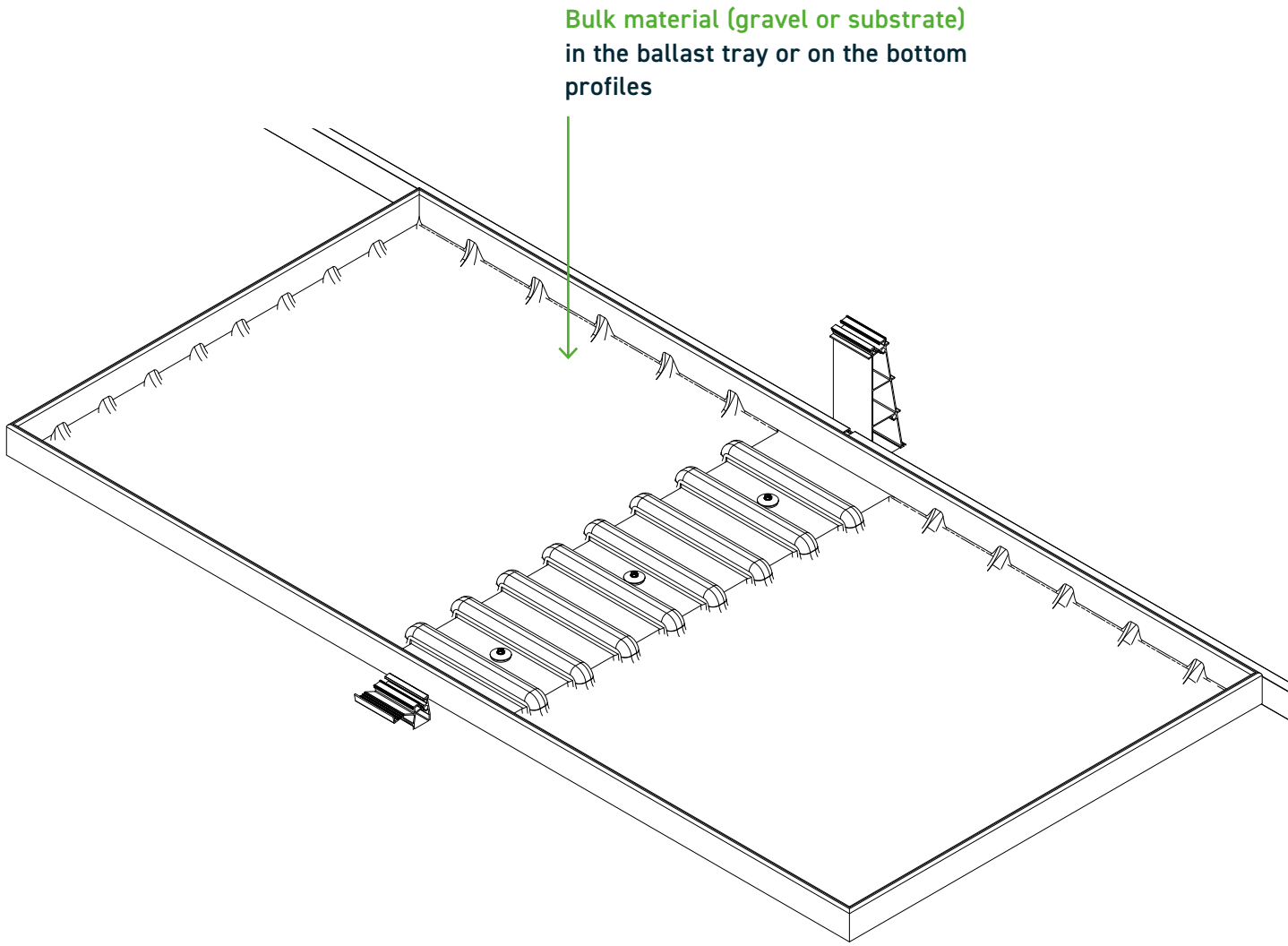

Attention!
Pay attention to minimum coverage in the ballast tray according to the project report! Maximum bulk height must not exceed 70 mm.

7

OPTIONAL ASSEMBLY STEP **MOUNTING THE SIDE COVERS**

Components

Side covers

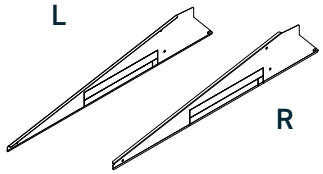

First remove the pre-punched recesses for the ballast stones in the side covers according to the information from the current project report. These are cut with the help of a side cutter and separated by bending.

Attention!
For one ballast brick, remove only the lower half, for two ballast bricks, remove both pre-punched recesses.

Required tool

Torque wrench with
hexagon socket SW 5 mm
Side cutter

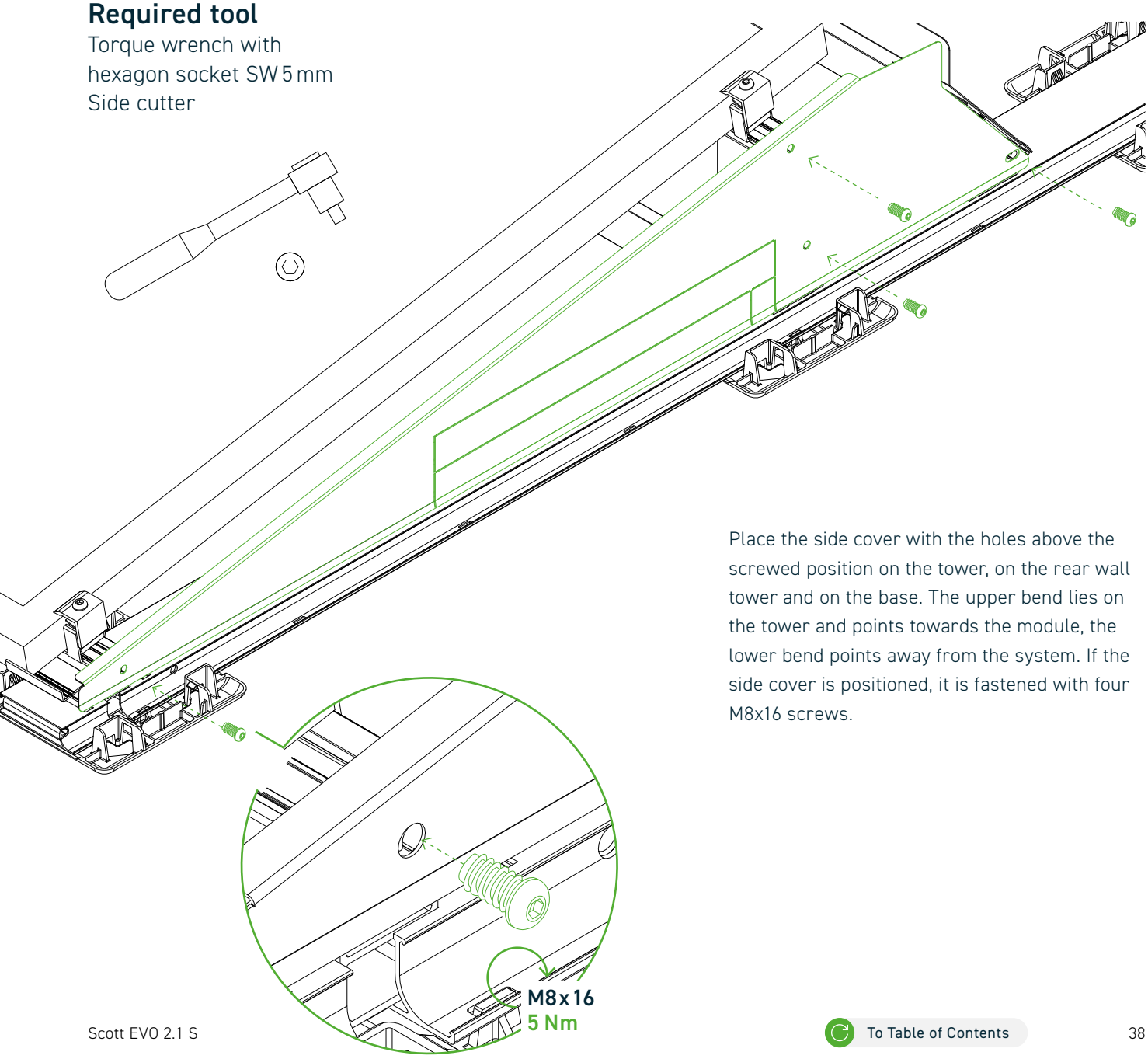

Place the side cover with the holes above the screwed position on the tower, on the rear wall tower and on the base. The upper bend lies on the tower and points towards the module, the lower bend points away from the system. If the side cover is positioned, it is fastened with four M8x16 screws.

8

OPTIONAL ASSEMBLY STEP
TRACK CONNECTION IN MODULE DIRECTION

Components

Adapter to tower

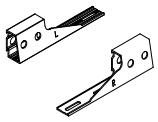

Track support

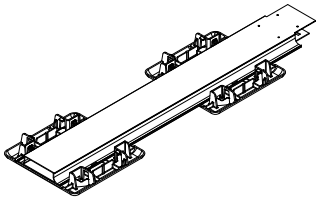

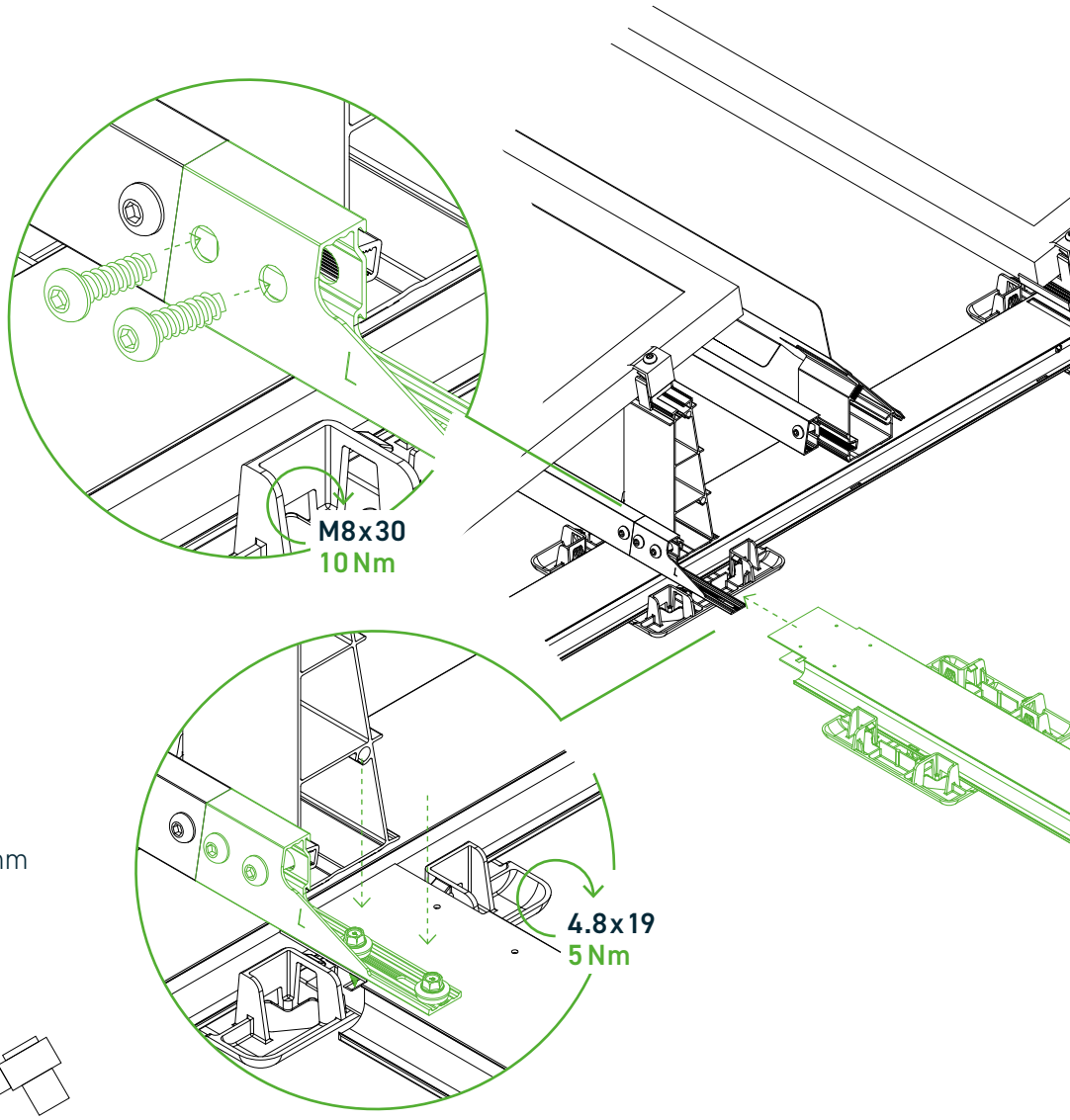

Required tool

Torque wrench with
hexagon socket SW 5 mm
and external hex socket SW 8 mm

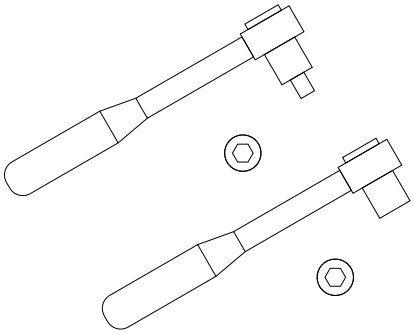

First, the support of the track is defined by the recess on the underside of the profile, since there the web of the ProPlat is inserted.

With the help of the adapter, the supports of the track can be mounted on the system. A distinction is made between the adapter on the left and the adapter on the right. The adapter is inserted into both guide grooves on the tower and pushed up to the cross strut. There, fixation is done with two screws M8 x 16. Observe a tightening torque of 10 Nm.

The adapter and track bottom profile are connected by two screws 4.8 x 19, which are screwed into the specified holes from above.

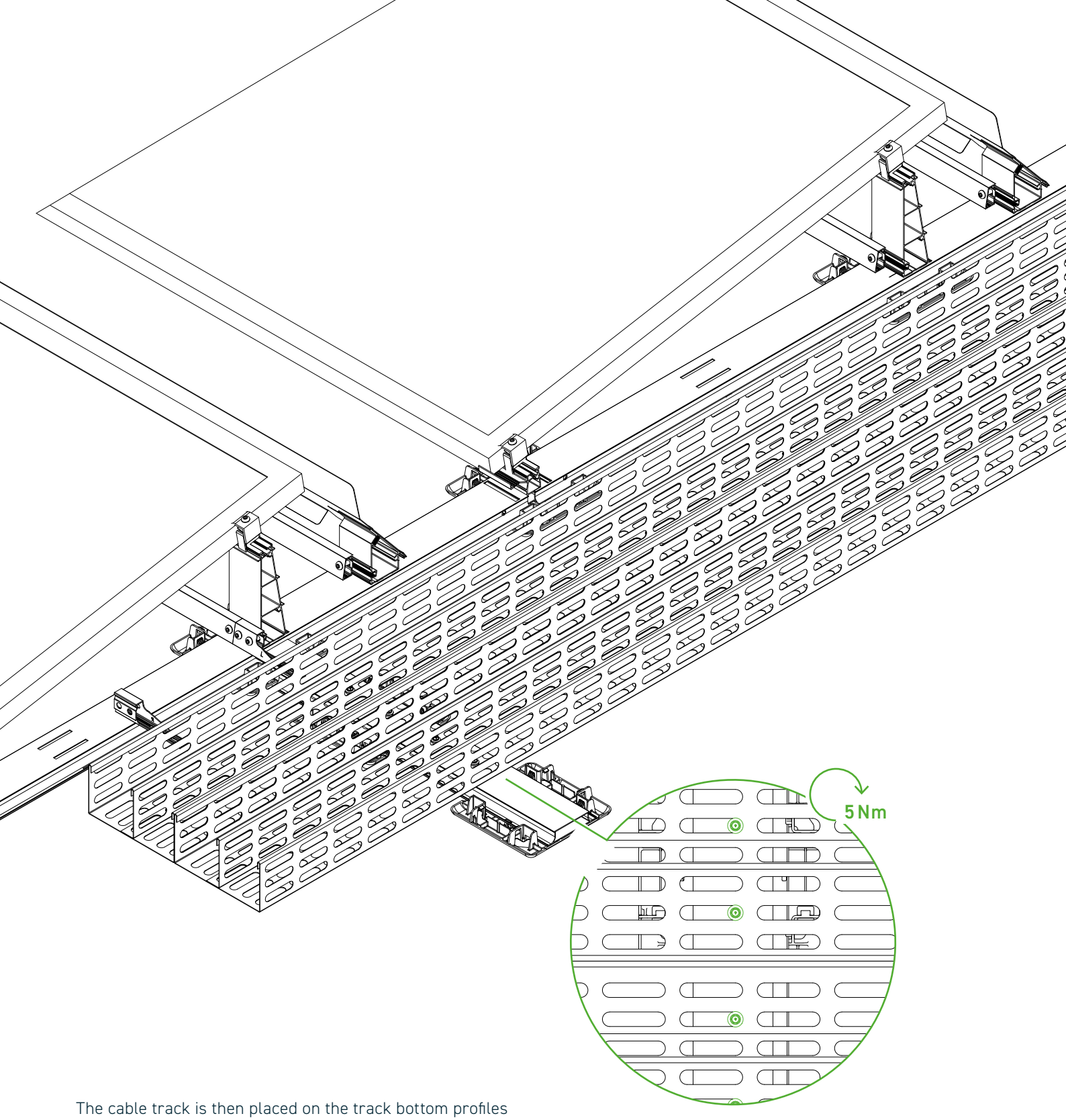

The cable track is then placed on the track bottom profiles and fixed with screws. Here, the installation specifications of the manufacturer of the cable track must also be observed.

The exact location and position of the adapters on the tower, the track bottom profiles and the cable tracks can be found in the current project documents.

9

OPTIONAL ASSEMBLY STEP
TRACK CONNECTION IN RAIL DIRECTION

Component

Track support

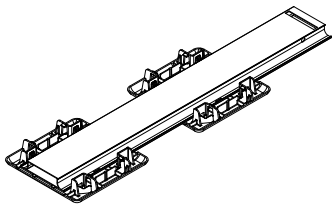

Required tool

Torque wrench with
hexagon socket SW 5 mm
and external hex socket SW 8 mm

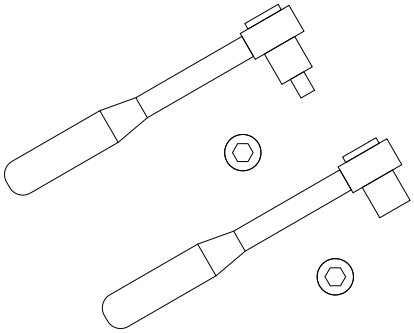

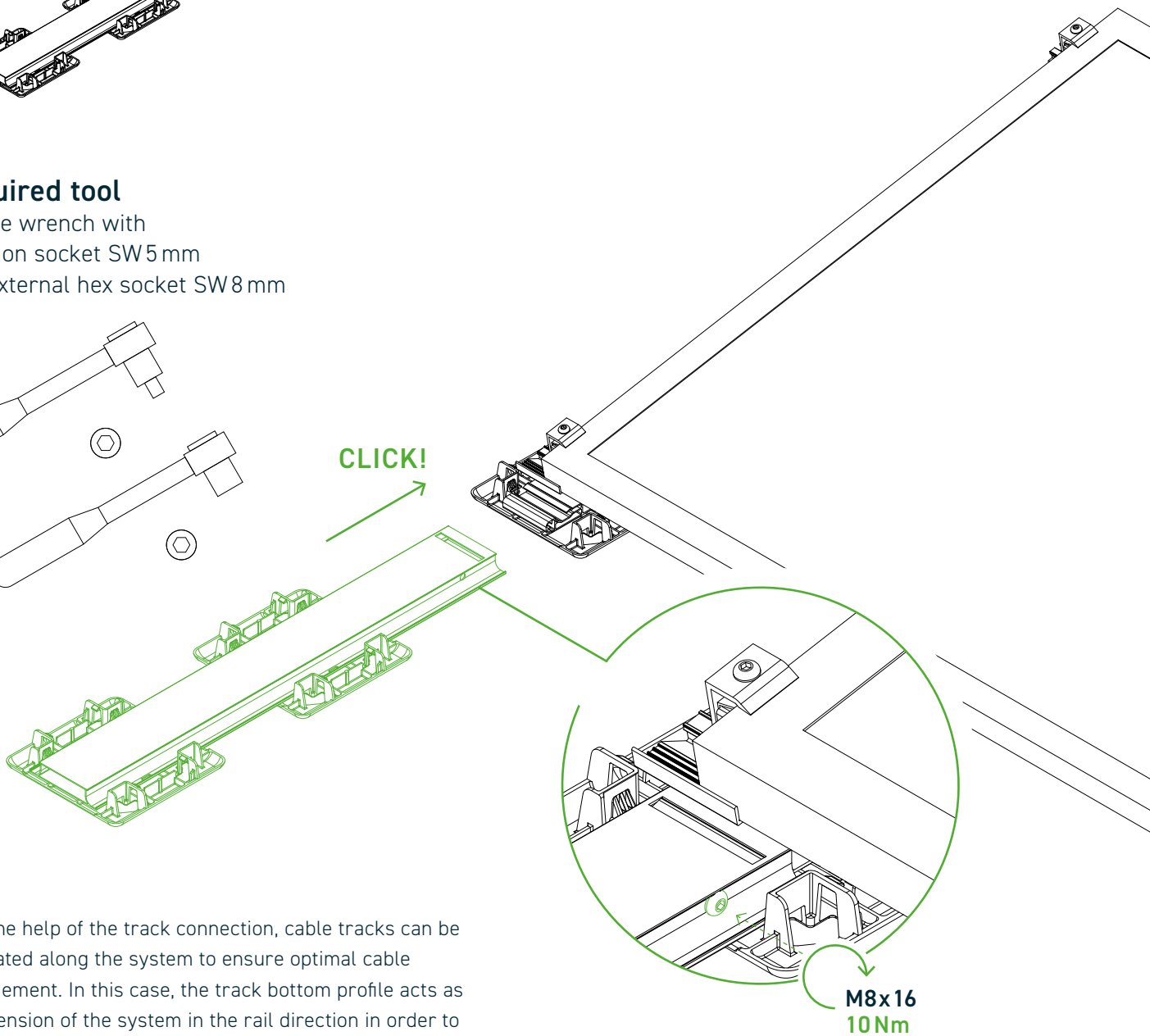

With the help of the track connection, cable tracks can be integrated along the system to ensure optimal cable management. In this case, the track bottom profile acts as an extension of the system in the rail direction in order to place the cable track there and screw it on. The track bottom profile must be pushed onto the base until the click detent engages with an audible noise. Fixing is done with a screw M8x16 through the hole in the profile into the base.

The cable track is then placed on the track bottom profiles and fixed with screws. In addition, the assembly specifications of the manufacturer of the cable track must be observed here.

The exact location and position of the track bottom profiles and the cable tracks can be found in the current project documents.

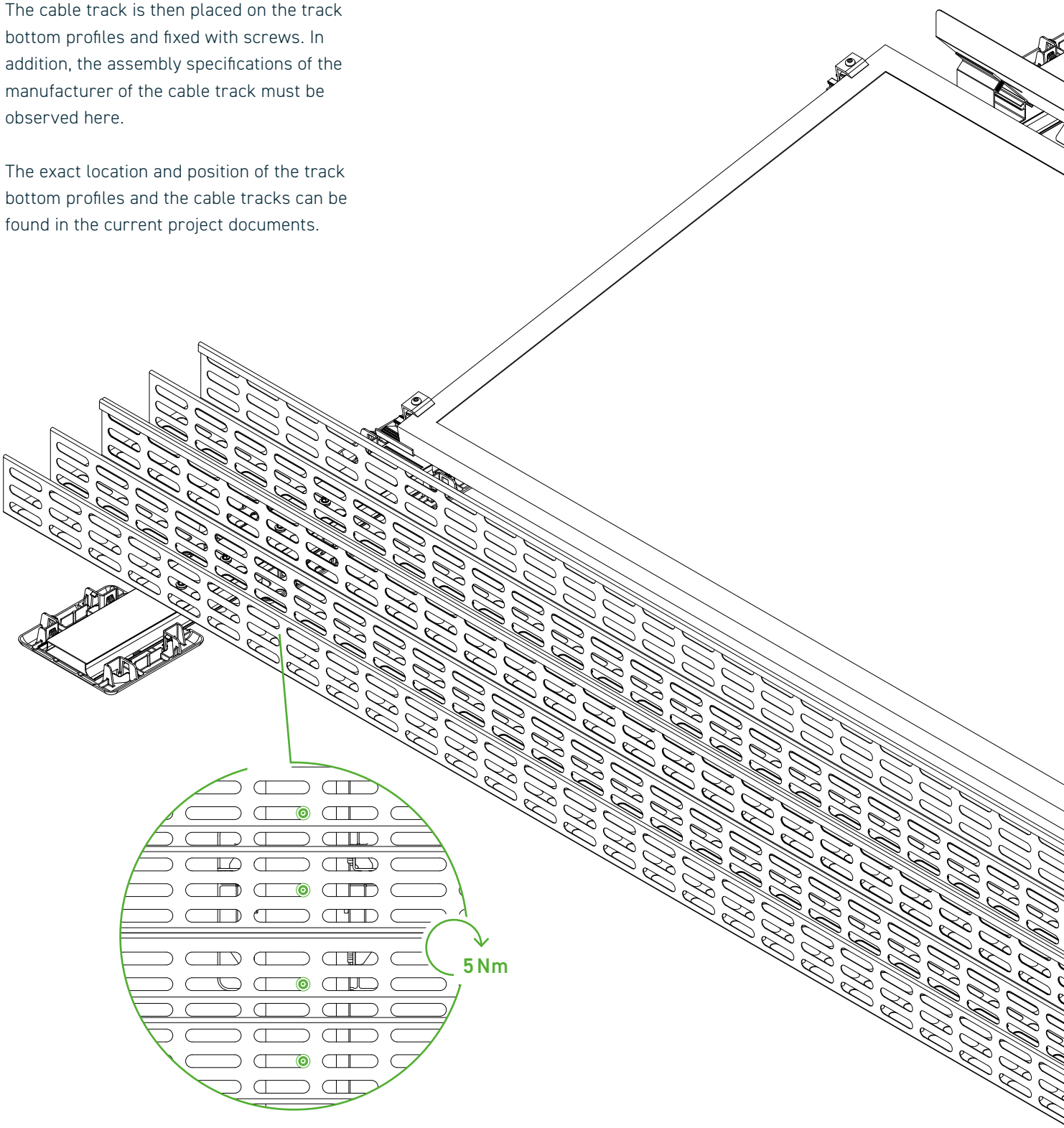

10

OPTIONAL ASSEMBLY STEP **CENTRE SUPPORT**

Component

Centre support

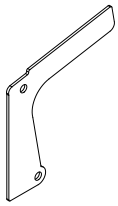

The centre support provides additional support for high snow loads, large modules and for insulation relief. Mounting is done with two screws on the tower. These are screwed through the lasered holes of the centre support into the recesses on the tower. The exact location and position of the centre supports can be found in the current project documents.

Required tool

Torque wrench with hexagon socket SW 5 mm

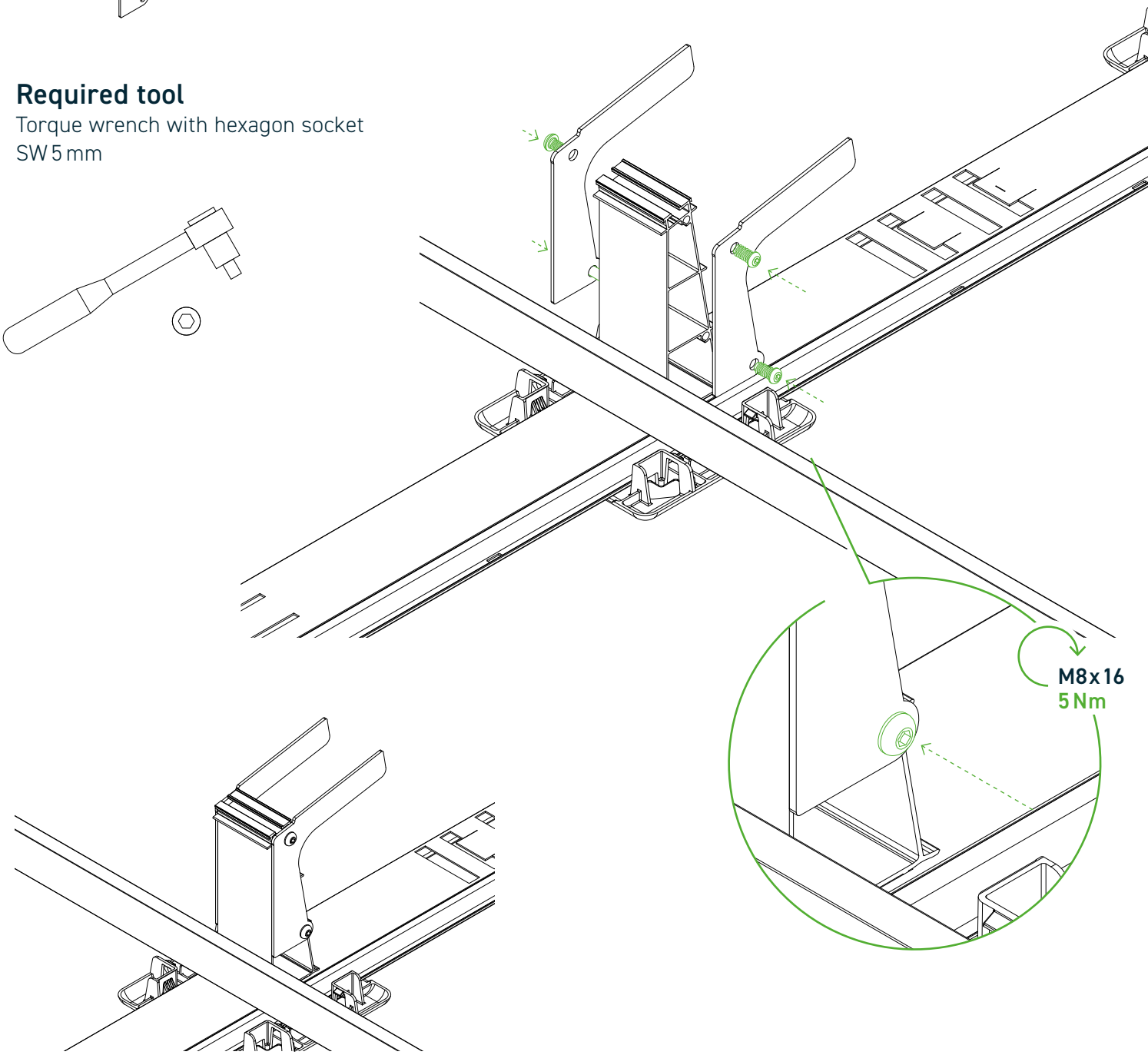

11

OPTIONAL ASSEMBLY
STEP **IRRADIATION SENSOR BRACKET**

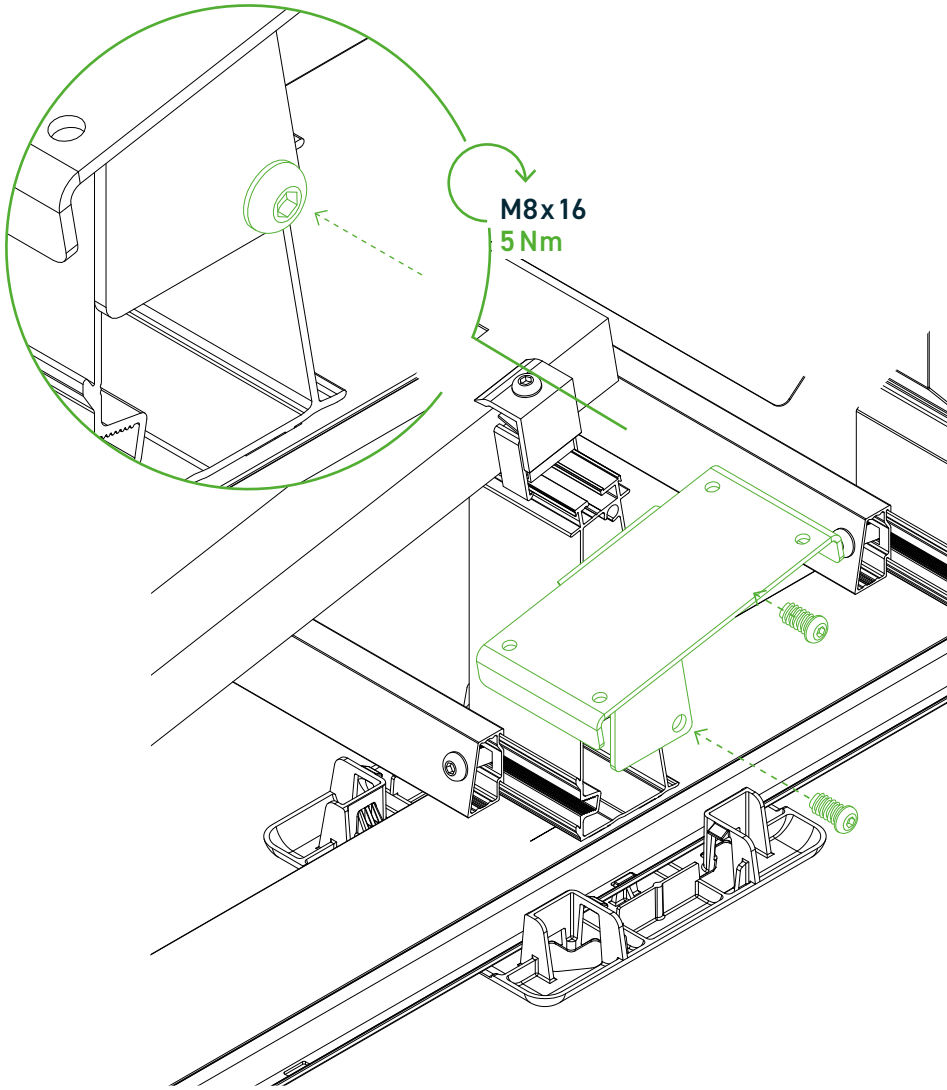

Component

Bracket for irradiation sensor

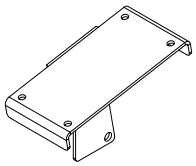

Required tool

Torque wrench with
hexagon socket SW 5 mm

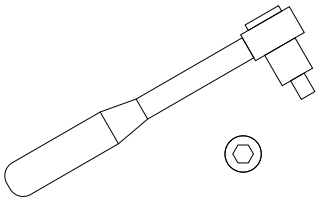

Installation of the irradiation sensor

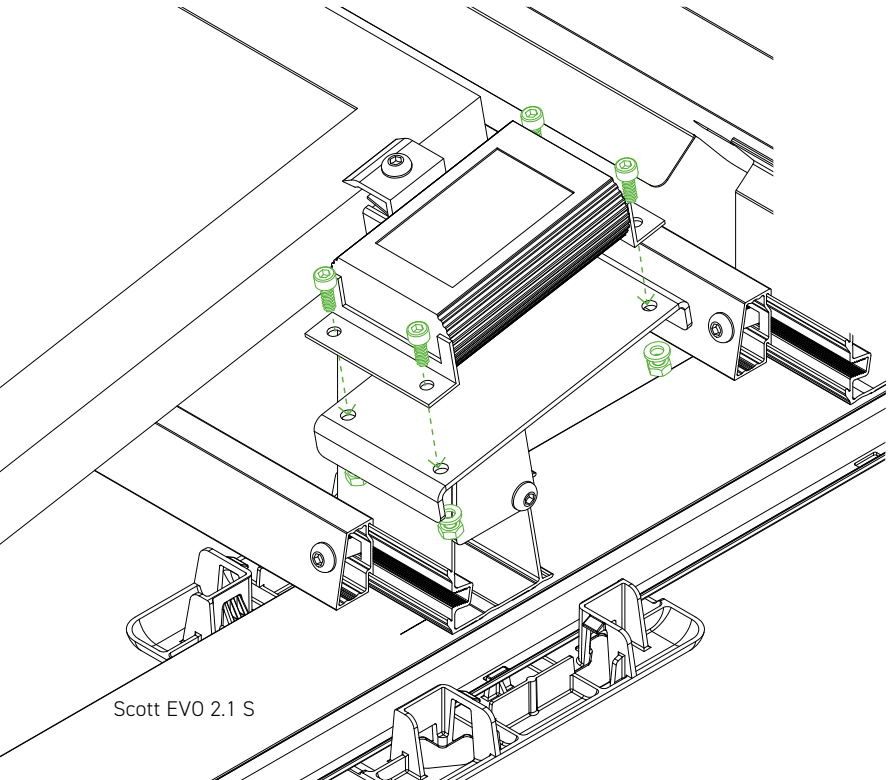

Using the bracket for the irradiation sensor it can be easily integrated into the system. The carrier plate is mounted on the tower with two screws. The exact location and position of the bracket can be found in the current project documents.

Attention!
The irradiation sensor is not included.

This must be mounted on the bracket according to the manufacturer's specifications.

12

OPTIONAL ASSEMBLY STEP

MOUNTING ADAPTERS FOR Q UPPER AND BALLAST STRUTS SCREW-ON POINT FOR SIDE COVER (MAQBS)

Component

Mounting adapter and screw-on point

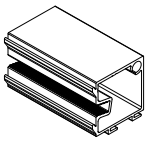

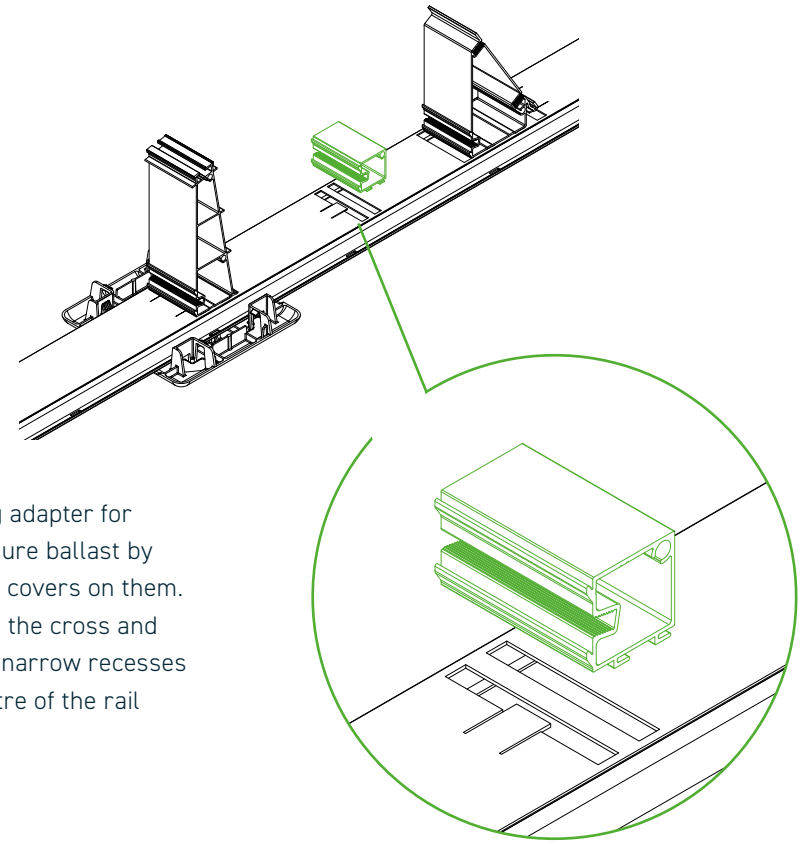

When using larger modules, the use of the mounting adapter for cross and ballast struts is necessary in order to ensure ballast by means of ballast bricks and to be able to mount side covers on them. Press the MAQBS with the locking lugs for fastening the cross and ballast struts to the side of the tower, vertically into narrow recesses of the main bottom profile and push them to the centre of the rail until the click lock engages with an audible noise.

Attention!
The MAQBS is only used for the main bottom profile type 1782.

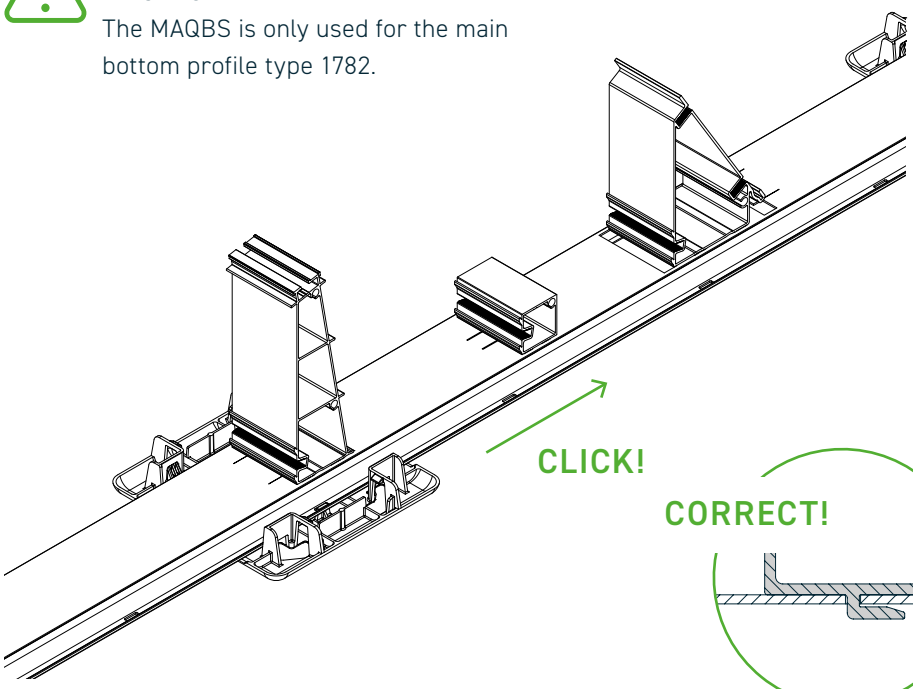

The detent connection must be checked for a clean fit and form fit (detent lug must be flush with the surface).

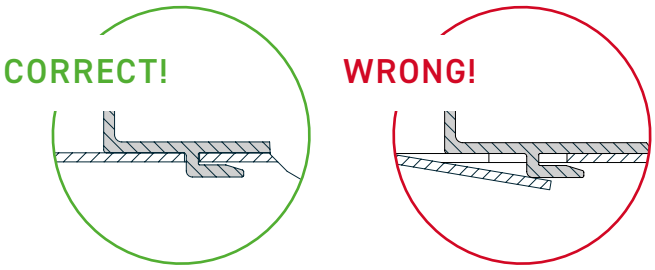

Final Examination

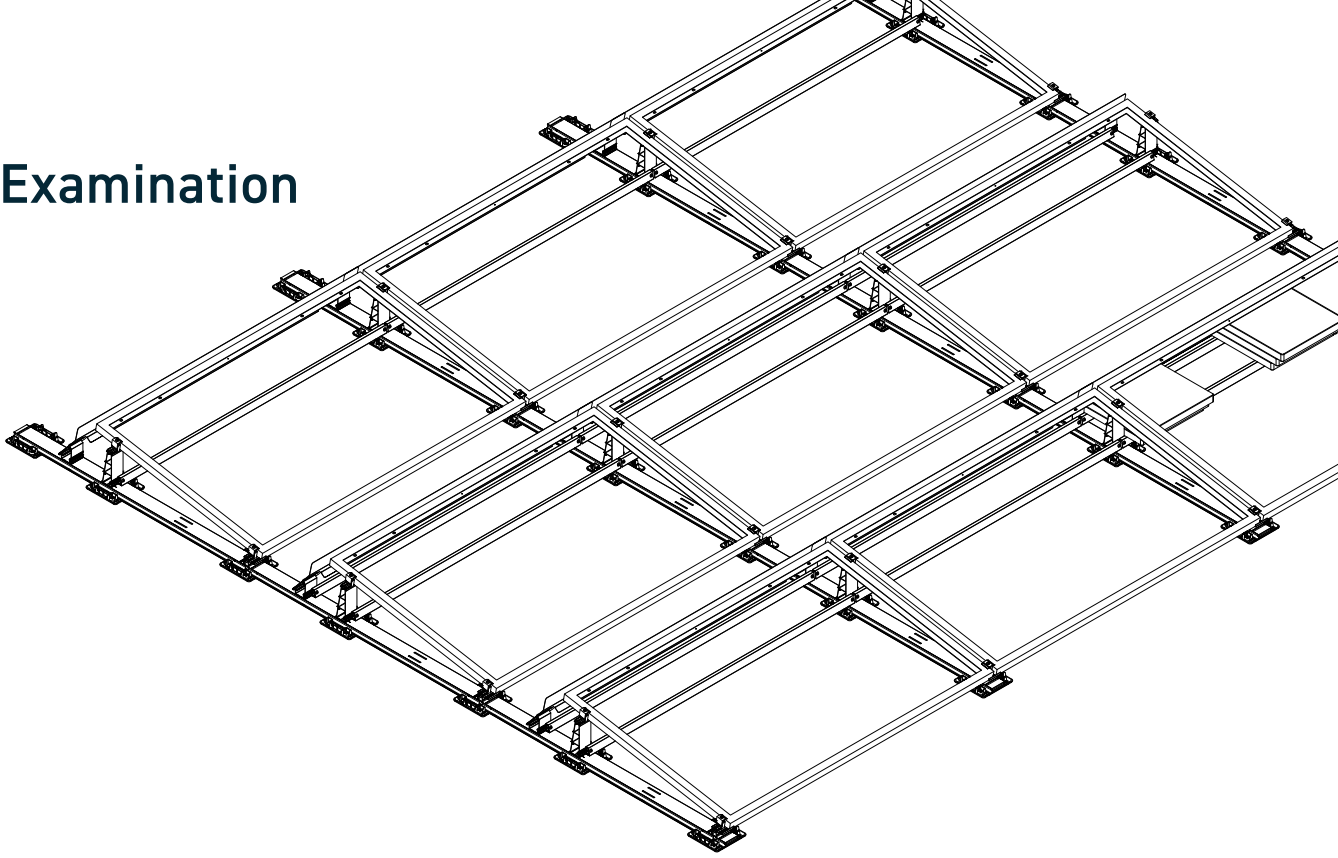

Final Examination

- Check whether the entire system and all components have been installed according to the current project report.
- It must be checked whether all screws are inserted at the intended points and tightened with the specified tightening torque.
- The information on the tightening torque can be found in the assembly instructions or on the packaging. Attention! These are safety-relevant and can lead to considerable damage if not observed.
- Check whether all ballast assembly has been performed with the specified weights.
  The information can be found in the current project report. Make sure that slipping, tilting or wobbling of the ballast elements is permanently eliminated. Attention! These are safety-relevant and can lead to considerable damage if not observed.
- Check that all click connections are locked correctly.

Maintenance

- The upper and lower limit of the tightening torque of the fittings must be checked regularly during maintenance (maintenance interval at least once a year; observe maintenance protocol).
- The recommendations for maintenance routines of the EVO 2.1 system due to thermal expansion must be observed.

Warranty and Product Liability

Please note that a product warranty is only granted in accordance with our warranty conditions if all safety and system instructions have been observed and the system has been installed properly. The warranty conditions can be found at Scott.solutions/downloads/

We will be happy to assist you.

Scott Norge AS
Krokatjønnveien 11c
5147 Fyllingsdalen
Norway

T +47 99 35 35 14
F +47 92 43 09 07
post@scott.no

www.scott.no

Assembly instructions-Scott-EVO2.1-S-EN-02-08/2023